Automating Tomorrow™

DESTACO Custom Catalog

12/07/2020

Cesehsa

México

info@cesehsa.com.mx

cesehsa.com.mx

destaco.com

DESTACO Custom Catalog

12/07/2020

This catalog is a custom document and the products included is based on your unique selection from portions of complete catalogs that already exist. Please refer to our full catalogs for more information on products not included in this customized document.

Table of Contents

Technical Comparison Chart (MC) MC-TCH-1

Table of Contents (continued)

VERTICAL HOLD DOWN CLAMPS

Sizing and Application Chart

CLICK OR SCAN
To view full PDF catalog pages on these products

Series	Page MC-VHD-#	Max. Holding Capacity N [lbf.]							Height Under Clamping Bar mm [inch]							Overall Height mm [inch]									
		0 to 1000 [0 to 225]	1000 to 2000 [225 to 450]	2000 to 3000 [450 to 675]	3000 to 5000 [675 to 1125]	5000 to 7000 [1125 to 1575]	7000 to 10000 [1575 to 2250]	10000+ [2250+]	0 to 25 [0 to 0.98]	25 to 40 [0.98 to 1.57]	40 to 55 [1.57 to 2.17]	55 to 70 [2.17 to 2.76]	70 to 85 [2.76 to 3.35]	85 to 100 [3.35 to 3.94]	100+ [3.94+]	0 to 50 [0 to 1.97]	50 to 100 [1.97 to 3.94]	100 to 125 [3.94 to 4.92]	125 to 150 [4.92 to 5.91]	150 to 175 [5.91 to 6.89]	175 to 200 [6.89 to 7.87]	200 to 225 [7.87 to 8.86]	225 to 250 [8.86 to 9.84]	250 to 275 [9.84 to 10.83]	275+ [10.83+]
2002	1			●					●	●								●	●						
2007	5				●					●	●										●				
2010	7					●					●	●											●		
201	9	●							●								●								
202	11	●							●	●							●	●							
207	15		●	●						●								●			●				
210	19			●	●						●	●							●			●	●		
247	21				●						●	●										●	●		
267	21					●							●												●
5905	25				●						●									●					
5910	25						●				●												●		
5915	25							●				●													●
5105	27				●							●								●					
5110	27					●								●								●			
528	29				●						●										●	●			
548/578	30							●				●											●	●	
533/535	31					●					●	●	●									●	●	●	●
558	33							●						●											●
91090	34		●									●								●					
317	35		●									●						●							
527	37				●						●									●					
7-101	38			●						●									●						
7-58	38			●							●										●				
7-59	38				●							●										●			
7-60	38						●					●											●		
229	39				●						●												●		
501	41			●							●	●					●								
503	41					●							●		●			●	●						
505	41							●						●	●				●	●					
506	41							●							●					●		●			

Dimensions and technical information are subject to change without notice

CLICK OR SCAN
To view full PDF catalog pages on these products

VERTICAL HOLD DOWN CLAMPS

Sizing and Application Chart

Overall Length mm [inch]								Overal Width mm [inch]						Suitable Application Areas							Duty Cycle	Standard Material				Arm Style		Mounting Style			Service Environ-ment	
50 to 75 [1.97 to 2.95]	75 to 100 [2.95 to 3.94]	100 to 125 [3.94 to 4.92]	125 to 150 [4.92 to 5.91]	150 to 175 [5.91 to 6.89]	175 to 200 [6.89 to 7.87]	200 to 225 [7.87 to 8.86]	225 to 250 [8.86 to 9.84]	0 to 20 [0 to 0.78]	20 to 40 [0.78 to 1.57]	40 to 60 [1.57 to 2.36]	60 to 80 [2.36 to 3.15]	80 to 100 [3.15 to 3.94]	100+ [3.94+]	Welding	Assembly	Checking Fixtures	Machining	Woodworking	Closures	Food Processing		Steel	Stainless Steel	Toggle Lock Plus	Accom. Workpiece Variation	U-Bar Version	Solid Arm Version	Straight Base	Flanged Base	Weld-on Mounting	Normal	Harsh/Dirty
	●	●							●					○	◎	◎	●	◎	◎	⊗	○	✓		✓		✓	✓	✓	✓		✓	
		●		●					●	●				○	◎	◎	●	◎	◎	⊗	○	✓		✓		✓	✓	✓	✓		✓	
				●	●				●		●			○	◎	◎	●	◎	◎	⊗	○	✓		✓		✓	✓	✓	✓		✓	
●								●	●	●				●	◎	◎	⊗	◎	◎	○	●	✓	✓			✓		✓	✓		✓	
●									●			●		●	◎	◎	⊗	◎	◎	○	●	✓	✓			✓	✓	✓	✓		✓	
	●	●	●						●	●	●			●	◎	◎	●	◎	◎	○	○	✓	✓	✓		✓	✓	✓	✓		✓	
			●	●					●		●		●	○	◎	◎	●	◎	○	○	○	✓	✓	✓		✓	✓	✓	✓		✓	
				●							●			○	◎	◎	●	◎	●	⊗	○	✓				✓	✓	✓	✓		✓	
							●					●		○	◎	◎	●	○	●	⊗	◎	✓				✓			✓		✓	
		●							●					◎	◎	○	●	●	●	⊗	◎	✓					✓		✓	✓		✓
				●					●					◎	◎	◎	●	●	●	⊗	◎	✓						✓	✓	✓		✓
					●					●				◎	◎	○	●	●	●	⊗	◎	✓					✓		✓	✓		✓
		●							●					◎	◎	◎	●	●	●	⊗	◎	✓		✓			✓	✓	✓	✓		✓
			●							●				◎	◎	◎	●	●	●	⊗	◎	✓		✓			✓	✓	✓	✓		✓
				●						●				◎	◎	○	●	●	●	⊗	◎	✓					✓		✓	✓		✓
					●	●				●	●			◎	◎	◎	●	●	●	⊗	◎	✓					✓	✓	✓	✓		✓
										●	●			◎	◎	◎	●	●	●	⊗	◎	✓					✓	✓	✓	✓		✓
						●				●				◎	◎	●	○	●	●	⊗	◎	✓					✓	✓		✓	✓	
		●								●				●	◎	◎	●	◎	◎	○	○	✓				✓			✓		✓	
				●					●					●	◎	◎	●	◎	◎	○	○	✓				✓	✓	✓	✓		✓	
							●			●				◎	◎	○	●	●	●	⊗	◎	✓					✓		✓	✓		✓
		●								●				◎	◎	●	●	●	●	⊗	◎	✓			✓		✓		✓	✓		✓
					●					●				◎	◎	⊗	○	●	●	⊗	◎	✓			✓		✓		✓	✓		✓
					●						●			◎	◎	⊗	○	●	●	⊗	◎	✓			✓		✓		✓	✓		✓
					●						●			◎	◎	⊗	○	●	●	⊗	◎	✓			✓		✓		✓	✓		✓
					●						●			○	◎	◎	●	◎	●	⊗	○	✓			✓	✓			✓		✓	
●									●					◎	◎	○	●	●	●	⊗	◎	✓					✓	✓		✓		✓
	●		●							●				◎	◎	○	●	●	●	⊗	◎	✓					✓	✓		✓		✓
		●		●						●				◎	◎	○	○	●	●	⊗	◎	✓					✓	✓		✓		✓
			●			●					●			◎	◎	○	○	●	●	⊗	◎	✓					✓	✓		✓		✓

◎ Excellent/High ○ Fair/Medium ● Poor/Low ⊗ Not Recommended

HORIZONTAL HOLD DOWN CLAMPS

Sizing and Application Chart

CLICK OR SCAN
To view full PDF catalog pages on these products

2017

213

205

305

5310

Series	Page MC-HHD-#	Max. Holding Capacity N [lbf.]						Height Under Clamping Bar mm [inch]						Overall Height mm [inch]						
		0 to 1000 [0 to 225]	1000 to 2000 [225 to 450]	2000 to 3000 [450 to 675]	3000 to 5000 [675 to 1125]	5000 to 7000 [1125 to 1575]	7000 to 10000 [1575 to 2250]	0 to 10 [0 to 0.39]	10 to 20 [0.39 to 0.79]	20 to 30 [0.79 to 1.18]	30 to 40 [1.18 to 1.57]	40 to 50 [1.57 to 1.97]	50 to 60 [1.97 to 2.36]	0 to 25 [0 to 0.98]	25 to 40 [0.98 to 1.57]	40 to 55 [1.57 to 2.17]	55 to 70 [1.57 to 2.76]	70 to 85 [2.76 to 3.35]	85 to 100 [3.35 to 3.94]	100+ [1.57+]
2013	1		●						●						●					
2017	3			●						●						●				
2027	5				●						●						●			
213	7		●						●											
217	9	●	●							●										
227	11			●							●						●			
237	13				●							●						●		
245	15												●							●
205	17	●						●												
215	19		●	●						●					●					
225	21			●							●					●				
235	23				●							●					●			
305	25	●							●						●					
307	25		●							●							●			
309	25				●						●								●	
206	27	●													●					
5305	29			●						●					●					
5310	29						●				●					●				

Dimensions and technical information are subject to change without notice

CLICK OR SCAN
To view full PDF catalog pages on these products

HORIZONTAL HOLD DOWN CLAMPS

Sizing and Application Chart

Overall Length mm [inch]									Overal Width mm [inch]				Suitable Application Areas							Standard Material			Arm Style		Mounting Style			Service Environment	
50 to 75 [1.97 to 2.95]	75 to 100 [2.95 to 3.94]	100 to 125 [3.94 to 4.92]	125 to 150 [4.92 to 5.91]	150 to 175 [5.91 to 6.89]	175 to 200 [6.89 to 7.87]	200 to 225 [7.87 to 8.86]	225 to 250 [8.86 to 9.84]	250+ [9.84+]	0 to 25 [0 to 0.98]	25 to 40 [0.98 to 1.57]	40 to 55 [1.57 to 2.17]	55 to 70 [1.57 to 2.76]	Welding	Assembly	Checking Fixtures	Machining	Woodworking	Closures	Food Processing	Duty Cycle	Steel	Stainless Steel	Toggle Lock Plus	U-Bar Version	Solid Arm Version	Straight Base	Flanged Base	Welded	Normal	Harsh/Dirty
			●										○	◉	◉	●	◉	◉	⊗	○	✓		✓	✓			✓		✓	
						●					●		○	◉	◉	●	◉	◉	⊗	○	✓		✓	✓			✓		✓	
								●			●		○	◉	◉	○	◉	◉	⊗	○	✓		✓	✓			✓		✓	
			●							●			○	◉	◉	●	◉	◉	○	○	✓	✓		✓		✓	✓		✓	
					●					●			○	◉	◉	●	◉	◉	○	○	✓	✓		✓		✓	✓		✓	
					●						●		○	◉	◉	●	◉	◉	○	○	✓	✓		✓		✓	✓		✓	
								●				●	○	◉	◉	●	◉	◉	○	○	✓	✓		✓			✓		✓	
								●				●	○	◉	○	○	◉	○	⊗	○	✓			✓			✓		✓	
●									●				●	◉	◉	●	◉	◉	○	○	✓	✓		✓	✓	✓	✓		✓	
			●							●			○	◉	◉	●	◉	◉	○	○	✓	✓		✓	✓	✓	✓		✓	
				●						●			○	◉	◉	●	◉	◉	○	○	✓	✓		✓		✓	✓		✓	
								●				●	○	◉	◉	●	◉	◉	○	○	✓	✓		✓			✓		✓	
●									●				●	◉	○	●	◉	◉	○	○	✓	✓	✓	✓			✓		✓	
	●										●		○	◉	○	○	◉	◉	○	○	✓		✓	✓			✓		✓	
			●									●	○	◉	○	○	◉	◉	○	○	✓	✓	✓	✓			✓		✓	
●									●				●	◉	○	●	○	◉	○	○		✓		✓			✓			✓
						●							◉	◉	○	●	●	●	⊗	◉	✓		✓			✓		✓	✓	✓
								●				●	◉	◉	○	●	●	●	⊗	◉	✓		✓			✓		✓	✓	✓

◉ Excellent/High ○ Fair/Medium ● Poor/Low ⊗ Not Recommended

STRAIGHT LINE ACTION CLAMPS

Sizing and Application Chart

CLICK OR SCAN
To view full PDF catalog pages on these products

Series	Page MC-SLA-#	Max. Holding Capacity N [lbf.]							Plunger Travel mm [inch]				
		0 to 1000 [0 to 225]	1000 to 2000 [225 to 450]	2000 to 3000 [450 to 675]	3000 to 5000 [675 to 1125]	5000 to 7000 [1125 to 1575]	7000 to 10000 [1575 to 2250]	10000+ [2250+]	0 to 20 [0 to 0.79]	20 to 40 [0.79 to 1.57]	40 to 60 [1.57 to 2.36]	60 to 80 [2.36 to 3.15]	80 to 105 [3.15 to 4.13]
6001	1	●							●				
601	2	●							●				
6015	3			●					●				
603	5			●						●			
608	5				●						●		
605	7		●							●			
606	8		●							●			
607	9				●						●		
609	10		●							●			
610	11				●						●		
615	12		●							●			
620	13			●						●			
630	14							●			●		
640	15							●					●
650	16							●				●	
95030	17			●						●			
95040	17				●					●			
95050	17						●				●		
95060	17						●				●		
5130	19					●					●		
5131	19			●						●			
5133	19				●							●	
5150	19					●				●			
602	23	●							●				
604	23		●							●			
624	23				●							●	
6004	25		●							●			
614	27				●					●			
670	29							●			●		
675	29							●		●			
690	29							●				●	
695	29							●		●			

Dimensions and technical information are subject to change without notice

CLICK OR SCAN
To view full PDF catalog pages on these products

STRAIGHT LINE ACTION CLAMPS

Sizing and Application Chart

Overall Height mm [inch]						Overall Length mm [inch]							Overal Width mm [inch]					Suitable Application Areas							Standard Material			Service Environment	
0 to 40 [0 to 1.57]	40 to 60 [1.57 to 2.36]	60 to 80 [2.36 to 3.15]	80 to 100 [3.15 to 3.94]	100 to 120 [3.15 to 4.72]	120 to 140 [4.72 to 5.51]	60 to 80 [2.36 to 3.15]	80 to 120 [2.36 to 4.72]	120 to 160 [4.72 to 6.30]	160 to 200 [6.30 to 7.87]	200 to 240 [7.87 to 9.45]	240 to 280 [9.45 to 11.02]	280+ [11.02+]	0 to 30 [0 to 1.18]	30 to 45 [1.18 to 1.77]	45 to 60 [1.77 to 2.36]	60 to 75 [2.36 to 2.95]	75 to 90 [2.95 to 3.54]	Welding	Assembly	Checking Fixtures	Machining	Woodworking	Food Processing	Duty Cycle	Steel	Stainless Steel	Toggle Lock Plus	Normal	Harsh/Dirty
●						●								●				○	◉	◉	●	◉	○	○	✓	✓		✓	
●						●							●					○	◉	◉	●	◉	○	○	✓	✓		✓	
●						●								●				○	◉	◉	●	◉	○	○	✓	✓	✓	✓	
			●					●							●			◉	◉	◉	●	◉	○	○	✓	✓	✓	✓	
				●				●							●			◉	◉	◉	●	◉	⊗	○	✓			✓	
			●					●							●			●	◉	◉	●	◉	⊗	○	✓			✓	
		●							●				●					●	◉	◉	●	◉	⊗	○	✓			✓	
			●					●							●			◉	◉	◉	●	◉	⊗	○	✓			✓	
				●					●						●			○	◉	◉	●	◉	⊗	○	✓			✓	
	●									●					●			●	◉	◉	●	◉	⊗	○	✓			✓	
	●											●			●			○	◉	◉	●	◉	⊗	○	✓			✓	
			●					●							●			◉	◉	◉	○	◉	⊗	○	✓		✓	✓	
				●								●					●	◉	◉	◉	○	◉	⊗	◉	✓		✓		✓
					●							●					●	◉	◉	◉	○	○	⊗	◉	✓				✓
		●					●							●				◉	◉	○	◉	○	⊗	◉	✓				
		●						●							●			◉	◉	○	◉	○	⊗	◉	✓				✓
			●						●							●		◉	◉	○	◉	○	⊗	◉	✓				✓
				●						●							●	◉	◉	○	◉	○	⊗	◉	✓				✓
			●						●							●		◉	◉	○	◉	○	⊗	◉	✓		✓		✓
				●								●				●		◉	◉	○	○	○	⊗	◉	✓		✓		✓
				●					●						●			◉	◉	○	○	○	⊗	◉	✓		✓		✓
												●				●		◉	◉	○	○	○	⊗	◉	✓		✓		✓
				●								●				●		◉	◉	○	○	○	⊗	◉	✓		✓		✓
		●				●							●					●	◉	◉	●	◉	○	○	✓	✓		✓	
				●			●							●				○	◉	◉	○	◉	○	○	✓	✓		✓	
					●				●						●			○	◉	◉	○	◉	○	○		✓		✓	
				●				●					●					○	◉	◉	○	○	⊗	○	✓				
									●					●				◉	◉	◉	○	○	⊗	◉	✓			✓	
					●						●			●				◉	◉	◉	○	○	⊗	◉	✓			✓	
					●				●					●				◉	◉	◉	○	○	⊗	◉	✓			✓	
					●							●		●				◉	◉	◉	○	○	⊗	◉	✓			✓	
					●					●				●				◉	◉	◉	○	○	⊗	◉	✓			✓	

◉ Excellent/High ○ Fair/Medium ● Poor/Low ⊗ Not Recommended

PULL ACTION LATCH CLAMPS

Sizing and Application Chart

CLICK OR SCAN
To view full PDF catalog pages on these products

Series	Page MC-PAL-#	Max. Holding Capacity N [lbf.]						Plunger Travel mm [inch]					
		0 to 2000 [0 to 450]	2000 to 4000 [450 to 900]	4000 to 6000 [900 to 1350]	6000 to 10000 [1350 to 2250]	10000 to 20000 [2250 to 4500]	20000+ [4500+]	0 to 50 [0 to 1.97]	50 to 75 [14.97 to 2.95]	75 to 100 [2.95 to 3.94]	100 to 125 [3.94 to 4.92]	125 to 150 [4.92 to 5.91]	150+ [5.91+]
3031	1	●						●					
3051	1				●			●					
330	3	●							●				
351	3	●									●		
371	3		●									●	
381	3			●									●
323	7	●						●					
331	7		●					●					
341	7				●				●				
375	11					●				●			
385	13						●		●				
324	16		●					●					
334	16			●					●				
344	16				●				●				
374	16					●		●					
301	20	●									●		
311	20			●						●			
3011	21				●					●			
353	22			●	●	●		●					

Dimensions and technical information are subject to change without notice

CLICK OR SCAN
To view full PDF catalog pages on these products

PULL ACTION LATCH CLAMPS

Sizing and Application Chart

Overall Height mm [inch]						Overall Length mm [inch]						Overal Width mm [inch]						Standard Material				Hook Style		Service Environment	
0 to 50 [0 to 1.97]	50 to 75 [14.97 to 2.95]	75 to 100 [2.95 to 3.94]	100 to 125 [3.94 to 4.92]	125 to 150 [4.92 to 5.91]	150+ [5.91+]	50 to 100 [1.97 to 3.94]	100 to 150 [3.94 to 5.91]	150 to 200 [5.91 to 7.87]	200 to 250 [5.91 to 9.84]	250 to 300 [5.91 to 11.81]	300 to 350 [11.81 to 13.78]	0 to 40 [0 to 1.57]	40 to 50 [1.57 to 1.97]	50 to 60 [1.97 to 2.36]	60 to 70 [2.36 to 2.76]	70 to 80 [2.76 to 3.15]	80 to 90 [3.15 to 3.54]	Duty Cycle	Steel	Stainless Steel	Toggle Lock Plus™	Fixed	Adjustable U-Hook	Adjustable J-Hook	Normal	Harsh/Dirty
●									●				●					○	✓	✓	✓			✓	✓	
●									●				●					○	✓	✓	✓			✓	✓	
●								●					●					○	✓	✓				✓	✓	
●									●				●					○	✓	✓	✓			✓	✓	
	●										●				●			○	✓	✓	✓			✓	✓	
	●										●						●	○	✓	✓	✓			✓	✓	
●						●						●						○	✓	✓	✓		✓		✓	
●								●					●					○	✓	✓	✓		✓		✓	
	●								●					●				○	✓	✓	✓		✓		✓	
			●							●							●	⊙	✓		✓		✓			✓
		●							●								●	⊙	✓	✓	✓		✓			✓
		●				●						●						○	✓	✓	✓		✓		✓	
				●			●					●						○	✓	✓	✓		✓		✓	
					●		●							●				○	✓	✓	✓		✓		✓	
					●			●							●			⊙	✓				✓			✓
●									●				●					○	✓	✓		✓			✓	
	●								●						●			○	✓			✓			✓	
		●							●						●			⊙	✓	✓		✓				✓
	●								●	●				●				⊙	✓	✓		✓				✓

⊙ Excellent/High ○ Fair/Medium ● Poor/Low ⊗ Not Recommended

SQUEEZE ACTION PLIER CLAMPS

Sizing and Application Chart

CLICK OR SCAN
To view full PDF catalog pages on these products

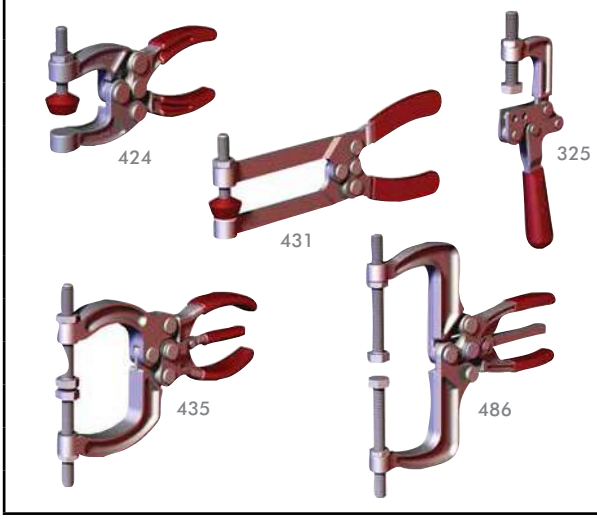

Series	Page MC-SAP-#	Max. Holding Capacity N [lbf.]						Maximum Clamping Thickness mm [inch]						
		0 to 1000 [0 to 225]	1000 to 2000 [225 to 450]	2000 to 3000 [450 to 675]	3000 to 4000 [675 to 900]	4000 to 5000 [900 to 1125]	5000 to 6000 [1125 to 1350]	0 to 10 [0 to 0.39]	10 to 20 [0.39 to 0.78]	20 to 30 [0.78 to 1.18]	30 to 40 [1.18 to 1.57]	40 to 60 [1.57 to 2.36]	60 to 80 [1.57 to 3.15]	80+ [2.26+]
325	1				●						●			
345	2				●									●
424	3	●							●					
441	3		●							●				
431	4	●						●						
425	5			●						●				
435	5			●							●			
462	6				●					●				
463	6				●							●		
482	6						●			●				
484	6						●						●	
486	6					●								●

Dimensions and technical information are subject to change without notice

CLICK OR SCAN
To view full PDF catalog pages on these products

MANUAL CLAMPING ACCESSORIES

See pages MC-ACC-1 to 10 for more information

PNEUMATIC TOGGLE CLAMPS

Sizing and Application Chart

CLICK OR SCAN
To view full PDF catalog pages on these products

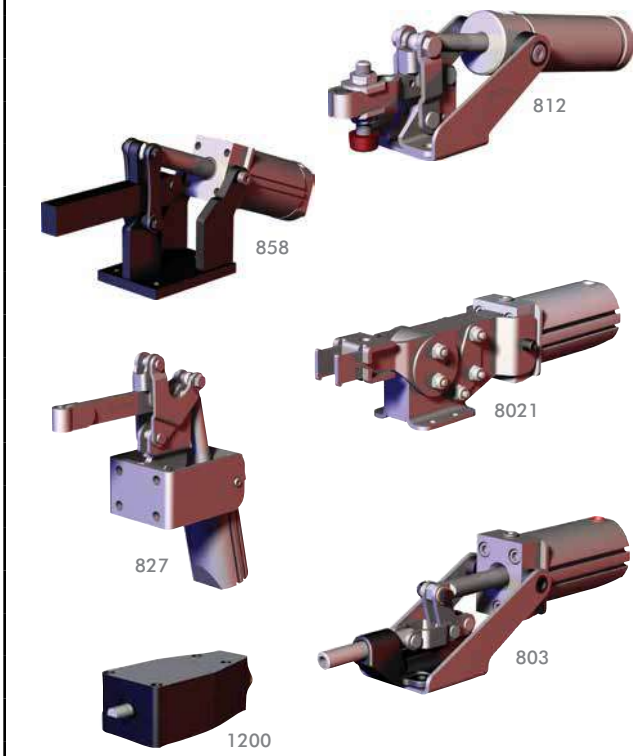

Series	Page MC-PTC-#	Max. Holding Capacity N [lbf.]							Max. Exerting Force at 5bar [72PSI] N [lbf.]						
		0 to 1000 [0 to 225]	1000 to 2000 [225 to 450]	2000 to 3000 [450 to 675]	3000 to 5000 [675 to 1125]	5000 to 7000 [1125 to 1575]	7000 to 10000 [1575 to 2250]	10000+ [2250+]	0 to 1000 [0 to 225]	1000 to 2000 [225 to 450]	2000 to 3000 [450 to 675]	3000 to 4000 [675 to 900]	4000 to 5000 [900 to 1125]	5000 to 6000 [1125 to 1350]	6000 to 8000 [1350 to 1800]
812	1	●							●						
802	3	●								●					
807	5			●							●				
810	7				●							●			
846	9				●							●			
847	11				●								●		
8007	13				●						●				
858	15							●							●
8021	17		●						●						
8071	17		●								●				
817	19		●							●					
827	19				●						●				
868	21														●
803	23			●							●				
8031	24						●					●			
830	25							●				●			
850	26							●						●	
800	27								●						
1200	27								●						

Dimensions and technical information are subject to change without notice

CLICK OR SCAN
To view full PDF catalog pages on these products

PNEUMATIC TOGGLE CLAMPS

Sizing and Application Chart

Overall Height mm [inch]											Overall Length mm [inch]								Overal Width mm [inch]					Suitable Application Areas							Service Environ-ment	
0 to 50 [0 to 1.97]	50 to 75 [1.97 to 2.95]	75 to 100 [2.95 to 3.94]	100 to 125 [3.94 to 4.92]	125 to 150 [4.92 to 5.91]	150 to 175 [5.91 to 6.89]	175 to 200 [6.89 to 7.87]	200 to 225 [7.87 to 8.86]	225 to 250 [8.86 to 9.84]	250 to 275 [9.84 to 10.83]	275+ [10.83+]	125 to 150 [4.92 to 5.91]	150 to 175 [5.91 to 6.89]	175 to 200 [6.89 to 7.87]	200 to 225 [7.87 to 8.86]	225 to 250 [8.86 to 9.84]	250 to 300 [9.84 to 11.81]	300 to 400 [11.81 to 15.75	400+ [15.75+]	20 to 40 [0.78 to 1.57]	40 to 60 [1.57 to 2.36]	60 to 80 [2.36 to 3.15]	80 to 100 [3.15 to 3.94]	100 to 120 [3.94 to 4.72]	Welding	Assembly	Light Machining	Duty Cycle	Accomodates Workpiece Variation	U-Bar Version	Solid Arm Version	Normal	Harsh/Dirty
●											●								●					●	◎	●	●		✓		✓	
	●												●							●				○	◎	●	○		✓		✓	
		●													●					●				○	◎	○	○		✓	✓	✓	
		●														●					●			○	◎	○	○		✓	✓	✓	
		●														●					●			◎	◎	○	○			✓	✓	
			●														●					●		◎	◎	○	○			✓	✓	
		●														●					●			◎	◎	○	◎			✓	✓	
						●												●					●	◎	◎	○	◎			✓	✓	
	●															●				●				◎	◎	○	◎		✓			✓
	●															●					●			◎	◎	○	◎		✓			✓
						●						●									●			○	◎	○	○		✓	✓	✓	
								●						●						●				○	◎	○	○		✓	✓	✓	
										●						●							●	◎	◎	○	◎			✓	✓	
	●															●					●			○	◎	○	○				✓	
	●													●							●			◎	◎	◎	◎					✓
		●														●					●			○	◎	○	○				✓	
						●												●					●	◎	◎	○	◎				✓	
●											●										●			○	○	◎	◎	✓				✓
	●												●								●			○	○	◎	◎	✓				✓

◎ Excellent/High ○ Fair/Medium ● Poor/Low ⊗ Not Recommended

PNEUMATIC SWING CLAMPS

Sizing and Application Chart

CLICK OR SCAN
To view full PDF catalog pages on these products

9540

89R40

89B40

8315

89E40

8215

035-1

035-2

8732

6004-SW

		Bore Size mm [in]						Total Stroke mm [in]					Clamp Stroke mm [in]			Clamping Force N [lbf]											
Series	**Page MC-PSC-#**	Less than 20 [0.79]	20 to 30 [0.79 to 1.18]	30 to 40 [1.18 to 1.57]	40 to 50 [1.57 to 1.97]	50 to 60 [1.97 to 2.36]	60+ [2.36+]	10 to 20 [0.39 to 0.78]	20 to 30 [0.78 to 1.18]	30 to 40 [1.18 to 1.57]	40 to 50 [1.18 to 1.57]	50 to 60 [1.18 to 1.57]	0 to 10 [0 to 0.39]	10 to 20 [0.39 to 0.78]	20 to 30 [0.78 to 1.18]	0 to 100	100 to 500	500 to 1000	1000 to 2000	Arm Rotation - Top of Stroke	Block Body Style	Threaded Body Style	Flanged Body Style	Sensor Ready	360° Arm Adjustability	Clamp Arm/Spindle Incl.	Manual Operation	Confined Space Operation
9522-2	**1**		●					●						●			●			✓			✓	✓				✓
9530-2	**1**			●				●						●				●		✓			✓	✓				✓
9540-2	**1**				●			●						●				●		✓			✓	✓				✓
9550-2	**1**					●		●						●				●		✓			✓	✓				✓
89R20	**6**		●						●				●			●					✓			✓	✓			
89R32	**6**			●					●				●				●				✓			✓	✓			
89R40-010	**6**				●					●			●				●				✓			✓	✓			
89R40-025	**6**				●						●			●			●				✓			✓	✓			
89R50	**6**					●						●		●				●			✓			✓	✓			
89R63	**6**						●					●		●				●			✓			✓	✓			
89B20	**12**		●						●				●			●					✓			✓	✓			
89B32	**12**			●					●				●				●				✓			✓	✓			
89B40	**12**				●				●				●				●				✓			✓	✓			
89B50	**12**					●				●				●				●			✓			✓	✓			
89B63	**12**						●		●				●						●		✓			✓	✓			
8115/8116	**17**	●							●				●								✓			✓	✓	✓		
8315/9316	**17**				●					●				●			●				✓			✓	✓	✓		
89E20	**21**		●						●				●			●						✓			✓			
89E32	**21**			●					●				●				●					✓			✓			
89E40	**21**				●				●				●				●					✓			✓			
89E50	**21**					●				●				●				●				✓			✓			
89E63	**21**						●		●				●						●			✓			✓			
8015/8016	**26**	●							●				●			●						✓		✓	✓	✓		
8215/8216	**26**			●						●				●			●					✓		✓	✓	✓		
8415/8416	**26**			●						●				●			●					✓		✓	✓	✓		
035-125	**30**		●						●					●		●						✓			✓			
035-132	**30**			●					●					●			●					✓			✓			
035-140	**30**				●					●				●			●					✓			✓			
035-150	**30**					●			●					●			●					✓			✓			
035-225	**30**		●						●					●		●							✓		✓			
035-232	**30**			●					●					●			●						✓		✓			
035-240	**30**				●				●					●			●						✓		✓			
035-250	**30**					●			●					●			●						✓		✓			
8725	**35**		●										●				●						✓			✓		✓
8732	**35**			●									●				●						✓			✓		✓
8740	**35**				●								●				●						✓			✓		✓
8750	**35**																						✓			✓		✓
6004-SW	**40**			N/A						●					●				●	✓			✓		✓	✓	✓	

Dimensions and technical information are subject to change without notice

CLICK OR SCAN
To view full PDF catalog pages on these products

PNEUMATIC POWER CYLINDERS

See pages MC-PPC-1 to 12 for more information

CLICK OR SCAN
To view full PDF catalog pages on these products

HYDRAULIC POWER CLAMPS

See pages MC-HYD-1 to 14 for more information

PNEUMATIC POWER CLAMPS

Sizing and Application Chart

CLICK OR SCAN
To view full PDF catalog pages on these products

Series	Page PC-PPC-#	Holding Torque at 5 bar Nm					Clamping Torque at 5 bar Nm					Piston Diameter mm						
		0 to 100	100 to 500	500 to 1000	1000 to 2000	2000 to 4000	0 to 100	100 to 500	500 to 1000	1000 to 2000	2000 to 4000	Less than 25	25	32	40	50	63	80
81L	1	●					●					●						
82L-4	5	●					●					●	●					
82L-2	15	●	●				●	●					●	●	●			
TCC-2	25	●					●								●	●	●	
82M-3E	28		●		●	●		●	●						●	●	●	●
52H-3E	53				●													
870/871	63		●				●								●			
860/861	65			●				●								●		
890/891	65				●			●									●	
1000/1001	65				●				●								●	●
82D	67		●				●	●							●		●	
84A	75	●	●				●	●							●	●		

Dimensions and technical information are subject to change without notice

CLICK OR SCAN
To view full PDF catalog pages on these products

PNEUMATIC POWER CLAMPS

Sizing and Application Chart

Material		Weight Kg					Air Consumption per Double Stroke at 5 bar dm³				Suitable Application Areas													
Aluminum	Steel	0 to 2	2-4	4-6	6-8	More than 8	0 to 0.5	0.50 to 1.00	1.00 to 2.00	More than 2.00	Welding	Assembly	Dirty Environment	End Effectors	Machining	Duty Cycle	Adjustable Opening Angle	Inductive Sensors Available	Dual Arms	Tolerance Compensation	Manual Version Available	Center Arm	Lateral Arms	Toggle Locking
●		●					●				⊗	◉	○	◉	○	○						✓		✓
●		●					●				◉	◉	◉	◉	◉		✓	✓			✓	✓	✓	✓
●		●	●				●	●	●		◉	◉	◉	○	◉	○	✓	✓			✓	✓	✓	✓
●		●	●					●	●	●	◉	◉	◉	◉	◉	○	✓	✓		✓		✓	✓	✓
●		●	●					●	●	●	◉	◉	◉	◉	◉	○	✓	✓			✓	✓	✓	✓
●			●								⊗	◉	◉	◉	◉	●	✓	✓			✓	✓	✓	✓
	●		●					●			⊗	◉	○	●	◉	●						✓		✓
	●		●							●	⊗	◉	○	●	◉	○						✓		✓
	●				●					●	⊗	◉	○	●	◉	○						✓		✓
	●					●				●	⊗	◉	○	●	◉	○						✓		✓
●			●	●					●	●	◉	◉	◉	○	◉	◉		✓	✓					✓
●		●	●				●	●			◉	◉	◉	◉	◉	○		✓	✓	✓		✓		

◉ Excellent/High ○ Fair/Medium ● Poor/Low ⊗ Not Recommended

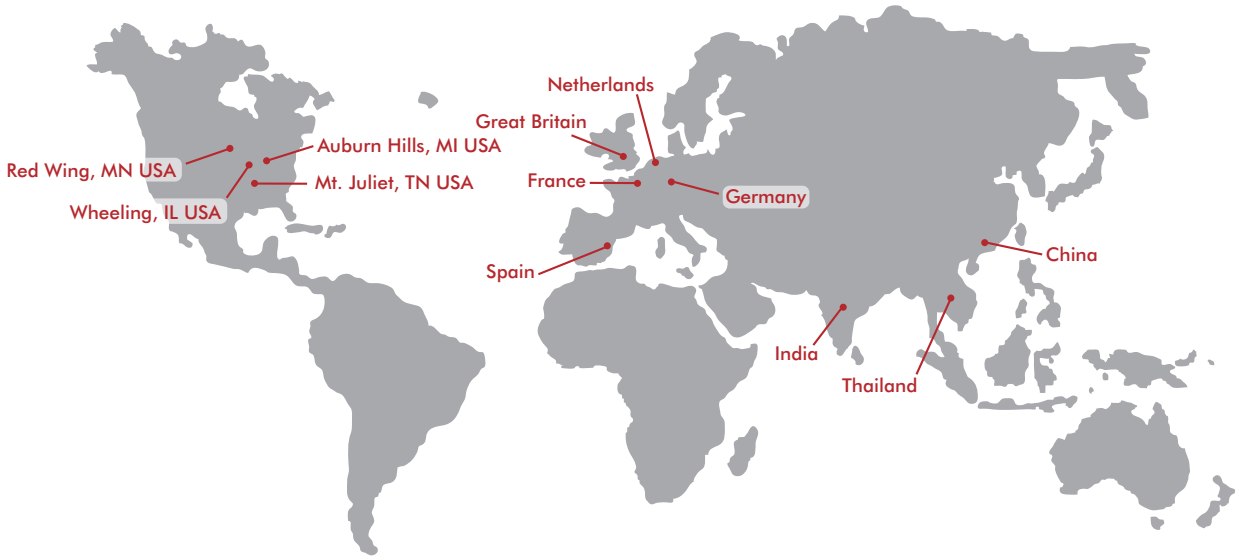

GLOBAL LOCATIONS

NORTH AMERICA

Corporate Headquarters
Auburn Hills, Michigan
Toll Free: 1.888.DESTACO
Marketing: marketing@destaco.com

Global Technology Center
Auburn Hills, Michigan
Tel: 1.248.836.6700
Customer Service: customerservice@destaco.com

Mt. Juliet, Tennessee
Tel: 1.888.DESTACO
Customer Service: customerservice@destaco.com

Wheeling, Illinois
Tel: 1.800.645.5207
Customer Service: camco@destaco.com

Red Wing, Minnesota (Central Research Laboratories)
Tel: 651.385.2142
Customer Service: sales@centres.com

ASIA

Thailand
Tel: +66-2-326-0812
Customer Service: info@destaco.com

China
Tel: +86-21-6081-2888
Customer Service: china@destaco.com

India
Tel: +91-80-41123421-426
Customer Service: india@destaco.com

EUROPE

Germany
Tel: +49-6171-705-0
Customer Service: europe@destaco.com

France
Tel: +33-4-73545001
Customer Service: france@destaco.com

Great Britain
Tel: +44-1902-797980
Customer Service: uk@destaco.com

Spain
Tel: +34-936361680
Customer Service: spain@destaco.com

Netherlands
Tel: +31-297285332
Customer Service: benelux@destaco.com

© Copyright, 2020 DESTACO. All rights for layout, photos and text rest with the publisher DESTACO. All photomechanical or other reproductions only with our express permission. All sales are based on our terms and conditions of sale, delivery and payment.