Automating Tomorrow™

DESTACO Custom Catalog

12/07/2020

Cesehsa

México

info@cesehsa.com.mx

cesehsa.com.mx

destaco.com

DESTACO Custom Catalog

12/07/2020

This catalog is a custom document and the products included is based on your unique selection from portions of complete catalogs that already exist. Please refer to our full catalogs for more information on products not included in this customized document.

Table of Contents

Standard Round Bore PC-PPC-63

Table of Contents (continued)

870-2, 871-2

Pneumatic Power Clamps | Ordering Information

870-2

Base Model	Description
870-2	38,1 mm [1.5 in.] Cylinder with Vertical Clamp Arm
871-2	38,1 mm [1.5 in.] Cylinder with Horizontal Clamp Arm

Sensors	Description (order separately)
BIM-IKE-AP	Magnetic Sensor, 2 pieces required
810151	Magnetic Sensor, 2 pieces required
810153	Magnetic Sensor, 2 pieces required
810155	Magnetic Sensor, 2 pieces required
810157	Magnetic Sensor, 2 pieces required

See below for sensor specifications.

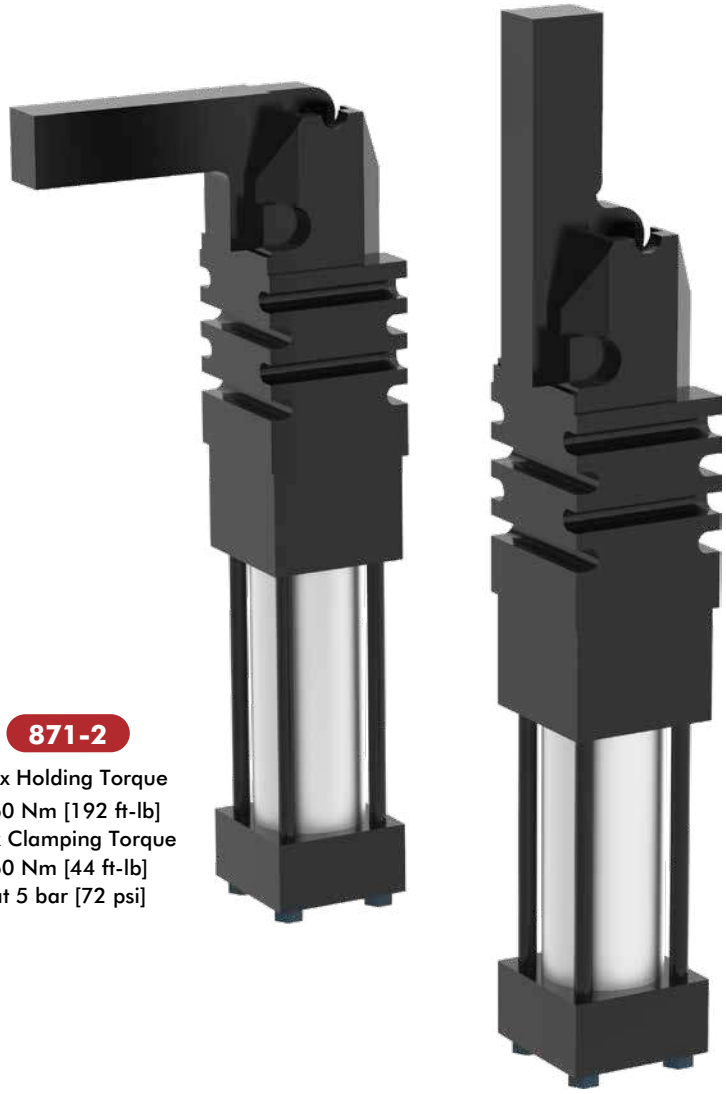

871-2

Max Holding Torque
260 Nm [192 ft-lb]
Max Clamping Torque
60 Nm [44 ft-lb]
at 5 bar [72 psi]

870-2

Max Holding Torque
260 Nm [192 ft-lb]
Max Clamping Torque
60 Nm [44 ft-lb]
at 5 bar [72 psi]

Pneumatic Power Clamps | Dimensions and Technical Specifications

Power clamps with the roller and cam principle

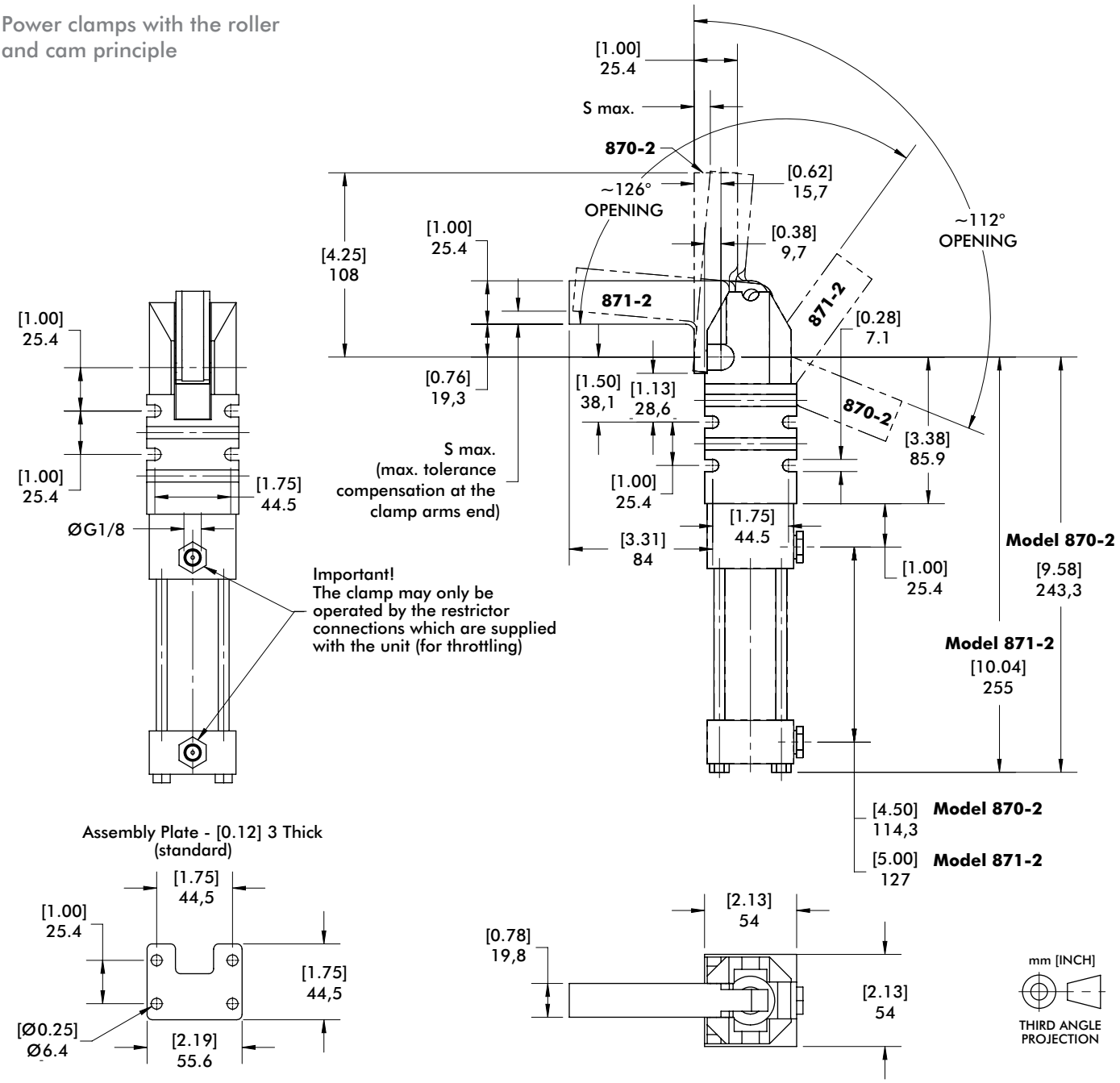

Model	Connection	S Max. Max. Tolerance Compensation at the Clamp Arms End [ft lb] Nm	Max. Operating Pressure [psi] bar	Cylinder Ø [in.] mm	Opening Angle	Weight [lbs] kg	Air Consumption per double stroke at 5 bar dm³ [ft³]
870-2	G 1/8	[3] 4,5	[145] 10	[1.50] 38,1	112°	[6.60] 3	0,95 [0.03]
871-2		[3] 3,5			118°		

Sensor Options	Mount Style	Connector	Length	Function	Voltage	Max. Switching Current	Voltage Drop
BIM-IKE-AP	Tie Rod	No connector cord	2m [6.6 ft.]	PNP	10-30V DC	200mA	2.3V
810151			2.7m [9ft.]	Reed	5-120V AC/DC	500mA	3.5V
810153				Reed	24-240V AC	4A	1.0V
810155				PNP	6-24V DC	500mA	1.0V
810157				NPN	6-24V DC	500mA	1.0V

860, 861, 890, 891, 1000, 1001

Pneumatic Power Clamps | Ordering Information

860

Base Model	Description
860	50,8 mm [2 in.] Cylinder with Vertical Clamp Arm
861	50,8 mm [2 in.] Cylinder with Horizontal Clamp Arm
890	63,5 mm [2.5 in.] Cylinder with Vertical Clamp Arm
891	63,5 mm [2.5 in.] Cylinder with Horizontal Clamp Arm
1000	82,5 mm [3.25 in.] Cylinder with Vertical Clamp Arm
1001	82,5 mm [3.25 in.] Cylinder with Horizontal Clamp Arm

Sensors	Description (order separately)
BIM-IKE-AP	Magnetic Sensor, 2 pieces required
810151	Magnetic Sensor, 2 pieces required
810153	Magnetic Sensor, 2 pieces required
810155	Magnetic Sensor, 2 pieces required
810157	Magnetic Sensor, 2 pieces required

See page 25 for sensor specifications.

Seal Kit	Description (order separately)
8610100	Seal Kit for Model 860, 861
8910100	Seal Kit for Model 890, 891
10010100	Seal Kit for Model 1000, 1001

Cylinder	Description (order separately)
865133-MR	Replacement Cylinder for Model 860
865132-MR	Replacement Cylinder for Model 861
895133-MR	Replacement Cylinder for Model 890
895132-MR	Replacement Cylinder for Model 891
1005134-MR	Replacement Cylinder for Model 1000
1005133-MR	Replacement Cylinder for Model 1001

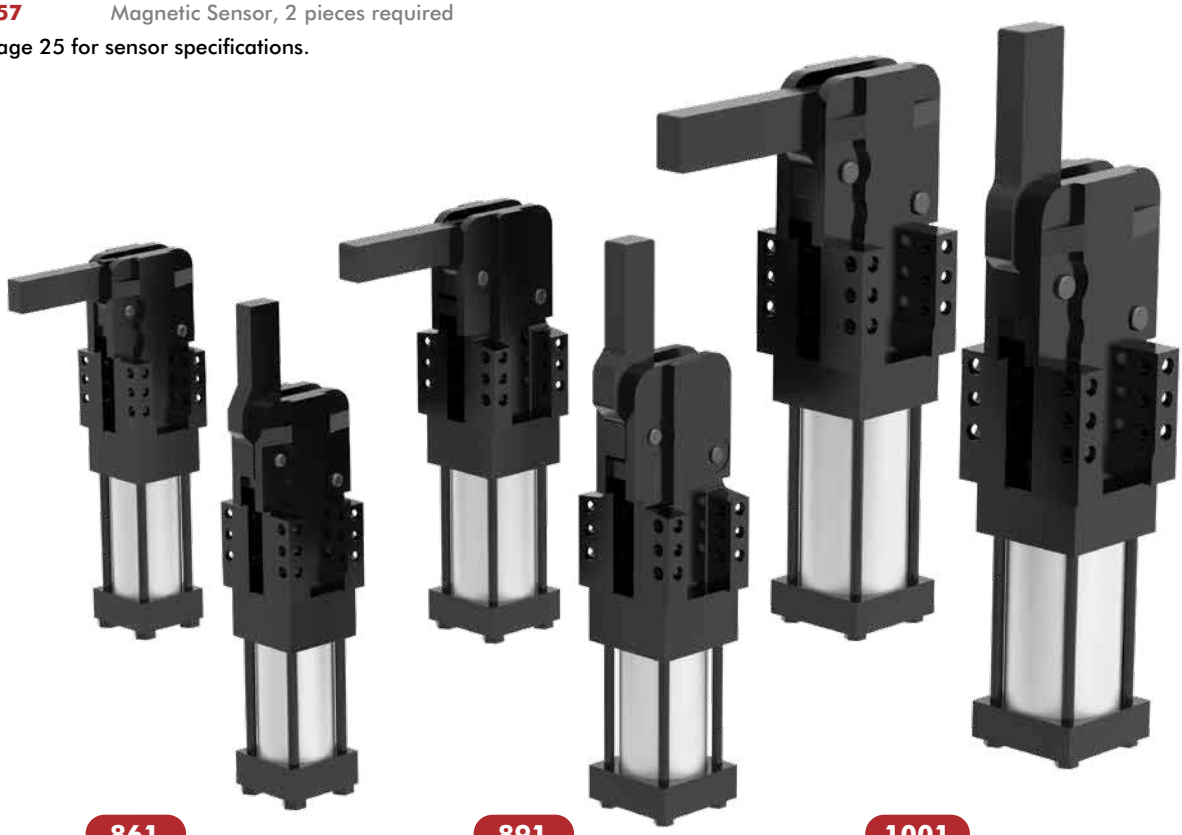

861

Max Holding Torque
380 Nm [280 ft-lb]
Max Clamping Torque
120 Nm [89 ft-lb]
at 5 bar [72 psi]

891

Max Holding Torque
1300 Nm [959 ft-lb]
Max Clamping Torque
270 Nm [199 ft-lb]
at 5 bar [72 psi]

1001

Max Holding Torque
1800 Nm [1328 ft-lb]
Max Clamping Torque
420 Nm [310 ft-lb]
at 5 bar [72 psi]

860

Max Holding Torque
380 Nm [280 ft-lb]
Max Clamping Torque
120 Nm [89 ft-lb]
at 5 bar [72 psi]

890

Max Holding Torque
1300 Nm [959 ft-lb]
Max Clamping Torque
270 Nm [199 ft-lb]
at 5 bar [72 psi]

1000

Max Holding Torque
1800 Nm [1328 ft-lb]
Max Clamping Torque
420 Nm [310 ft-lb]
at 5 bar [72 psi]

Dimensions and technical information are subject to change without notice

860, 861, 890, 891, 1000, 1001

Pneumatic Power Clamps | Dimensions and Technical Specifications

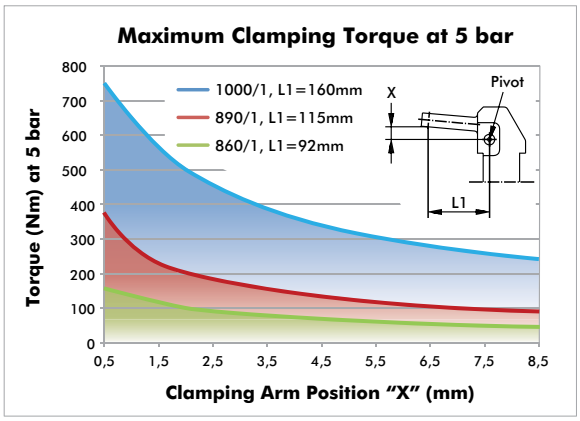

Model	Cylinder Ø mm [in]	Opening Angle	Weight kg [lbs]
860	[2.00] 50,8	96°	[8.58] 3,9
861		119°	
890	[2.50] 63,5	96°	[16.06] 7,3
891		119°	
1000	[3.25] 82,5	96°	[29.70] 13,5
1001		119°	

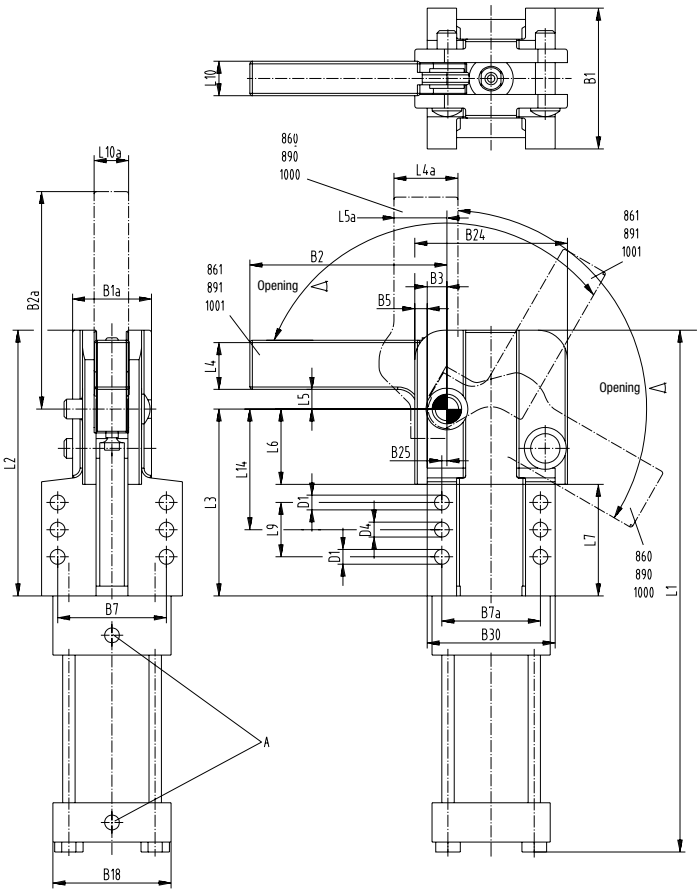

Power by compressed air, max. 6 bar
Operation with oil-free air is permissible.

Information vor machining of clamp arm: Steel 1.0726

Model	A	B1	B1A	B2	B2A	B3	B5	B7	B7A	B18	B24	B25	B30
860	G1/8	[2.94] 74,7	[1.75] 44,5	–	[5.44] 138,2	[0.41] 10,4	[0.25] 6,4	[2.31] 58,7	[2.19] 55,6	[2.5] 63,5	[3.31] 84,1	[0.09] 2,3	[2.81] 71,4
861				[4] 101,6	–								
890	G1/8	[3.56] 90,4	[2] 50,8	–	[6.57] 166,9	[0.5] 12,7	[0.31] 7,9	[2.76] 70,1	[2.5] 63,5	[3] 76,2	[3.87] 98,3	[0.13] 3,3	[3.25] 82,6
891				5.06 128,5	–								
1000	G1/8	[4.5] 114,3	[2.62] 66,5	–	[9] 228,6	[0.63] 16	[0.44] 11,2	[3.5] 88,9	[3.5] 88,9	[3.75] 95,3	[5.38] 136,7	[0.13] 3,3	[4.5] 114,3
1001				7 177,8	–								

Model	ØD1	ØD4	L1	L2	L3	L4	L4A	L5	L5a	L6	L7	L9	L10	L10a	L14
860	[0.34] 8,6	[0.31] 7,9	[12.44] 316	[5.75] 146,1	[4.06] 103,1	–	[1.12] 28,4	--	[0.69] 17,4	[1.44] 36,6	[2.5] 63,5	[1.25] 31,8	[0.62] 15,7	[0.62] 15,7	[2.5] 63,5
861						[1.13] 28,7	–	[0.4] 10,2	--						
890	[0.41] 10,4	[0.38] 9,7	[13.37] 339,6	[6.75] 171,5	[4.75] 120,7	–	[1.25] 31,8	–	[0.84] 21,4	[1.75] 44,5	[2.65] 67,3	[1.38] 35,1	[0.81] 20,6	[0.81] 20,6	[3.06] 77,7
891						[1.25] 31,8	–	[0.5] 12,7	--						
1000	[0.53] 13,5	[0.5] 12,7	[17.51] 444,8	[9.25] 235	[6.25] 158,8	–	[1.75] 44,5	–	[1.37] 34,8	[2.25] 57,2	[3.96] 100,6	[2] 50,8	[1] 25,4	[1] 25,4	[3.75] 95,3
1001						[1.75] 44,5	–	[0.88] 22,4	--						

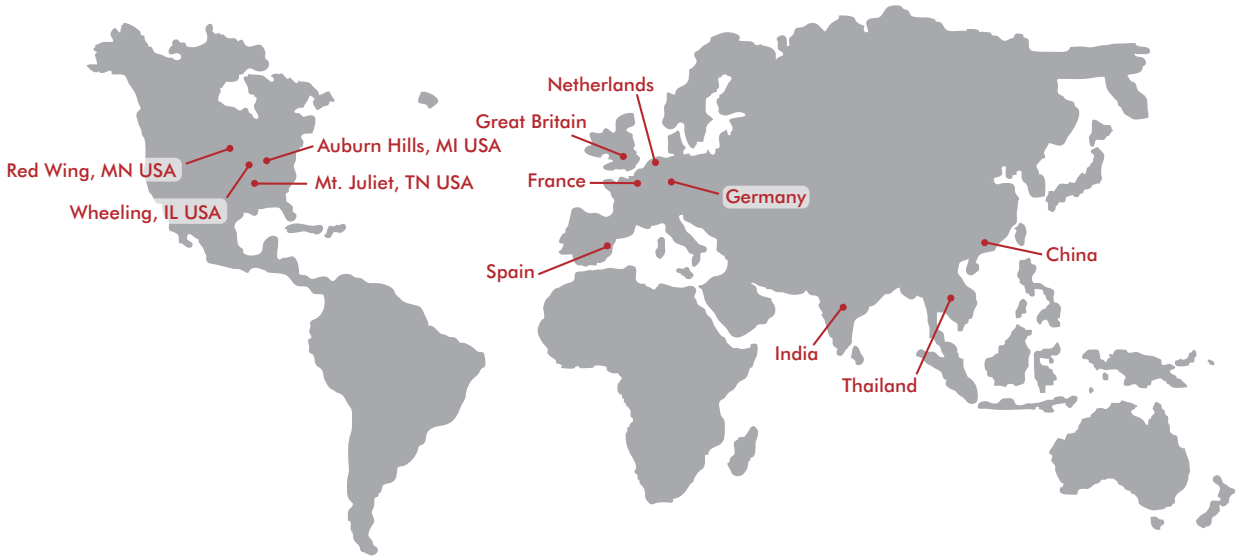

GLOBAL LOCATIONS

NORTH AMERICA

Corporate Headquarters
Auburn Hills, Michigan
Toll Free: 1.888.DESTACO
Marketing: marketing@destaco.com

Global Technology Center
Auburn Hills, Michigan
Tel: 1.248.836.6700
Customer Service: customerservice@destaco.com

Mt. Juliet, Tennessee
Tel: 1.888.DESTACO
Customer Service: customerservice@destaco.com

Wheeling, Illinois
Tel: 1.800.645.5207
Customer Service: camco@destaco.com

Red Wing, Minnesota (Central Research Laboratories)
Tel: 651.385.2142
Customer Service: sales@centres.com

ASIA

Thailand
Tel: +66-2-326-0812
Customer Service: info@destaco.com

China
Tel: +86-21-6081-2888
Customer Service: china@destaco.com

India
Tel: +91-80-41123421-426
Customer Service: india@destaco.com

EUROPE

Germany
Tel: +49-6171-705-0
Customer Service: europe@destaco.com

France
Tel: +33-4-73545001
Customer Service: france@destaco.com

Great Britain
Tel: +44-1902-797980
Customer Service: uk@destaco.com

Spain
Tel: +34-936361680
Customer Service: spain@destaco.com

Netherlands
Tel: +31-297285332
Customer Service: benelux@destaco.com

© Copyright, 2020 DESTACO. All rights for layout, photos and text rest with the publisher DESTACO. All photomechanical or other reproductions only with our express permission. All sales are based on our terms and conditions of sale, delivery and payment.