Automating Tomorrow™

DESTACO Custom Catalog

12/07/2020

Cesehsa

México

info@cesehsa.com.mx

cesehsa.com.mx

destaco.com

DESTACO Custom Catalog

12/07/2020

This catalog is a custom document and the products included is based on your unique selection from portions of complete catalogs that already exist. Please refer to our full catalogs for more information on products not included in this customized document.

Table of Contents

Pneumatic Swing Clamps MC-PSC-1

Table of Contents (continued)

9500 SERIES

Pneumatic Swing Clamps | Product Overview

Features:
- Ideal for tight spaces with an arm motion that rotates at the top of the stroke
- Includes a rod weld cover to protect the rod throughout the entire stroke
- Can be mounted on any face with optional side flange mounting kit
- Switch ready for Ø4mm or 6.5mm x 5mm sensors

Applications:
- Assembly
- Welding
- Light machining

Also Available:
See page MC-PSC-6 for mounting options

See page MC-PSC-7 for clamping arms

See page MC-PSC-40 for sensing options

Covered under one or more U.S./International Patents

9522-2

9530-2

9540-2

9550-2

Shown with optional clamping arm.

Technical Information

Model	Swing Direction	Total Stroke [in]mm	Stroke During Rotation [in]mm	Vertical Clamping Stroke [in]mm	Clamping Force @ [lbf.]N†	Bore Size [in.]mm	Air Consumption‡ dm³[in³]	Weight [lb.]kg	Replacement Seal Kit
9522-2L	LH	[0.50] 13	--	[0.50] 13	[34] 150	[0.86] 22	[0.004] 0,10	[0.68] 0,31	952292
9522-2R	RH								
9530-2L	LH	[0.79] 20		[0.79] 20	[76] 340	[1.26] 32	[0.010] 0,29	[1.25] 0,57	953092 954092
9530-2GL									
9530-2R	RH								
9530-2GR									
9540-2L	LH				[123] 550	[1.57] 40	[0.016] 0,46	[1.98] 0,90	
9540-2GL									
9540-2R	RH								
9540-2GR									
9550-2L	LH				[196] 870	[1.97] 50	[0.026] 0,74	[3.33] 1,51	955092
9550-2GL									
9550-2R	RH								
9550-2GR									

†with standard clamping arm at 5bar [72psi]. ‡Per double stroke at 5bar [72psi]

Operating Pressure Range: 3bar [45psig] to 8bar [120psig]
Maximum Operating Temperature: 60°C [140°F]

Dimensions and technical information are subject to change without notice

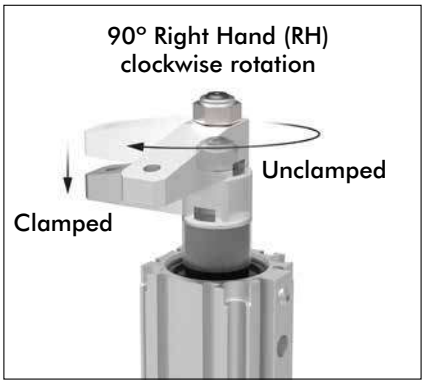

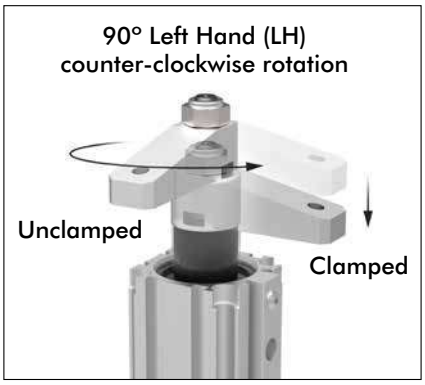

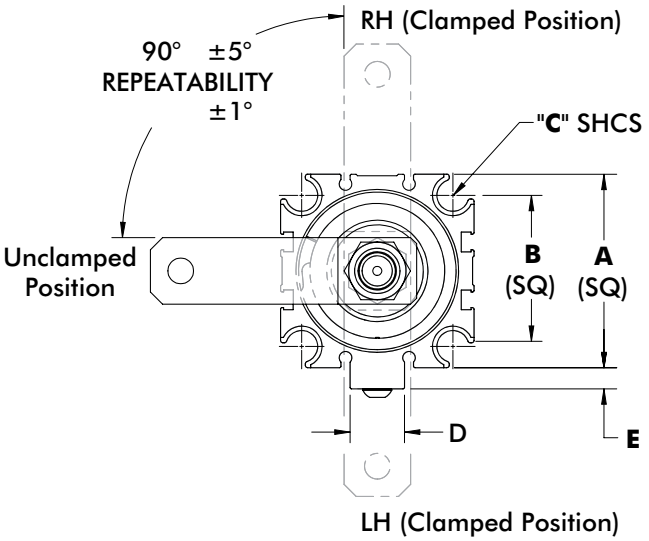

mm [INCH]

THIRD ANGLE PROJECTION

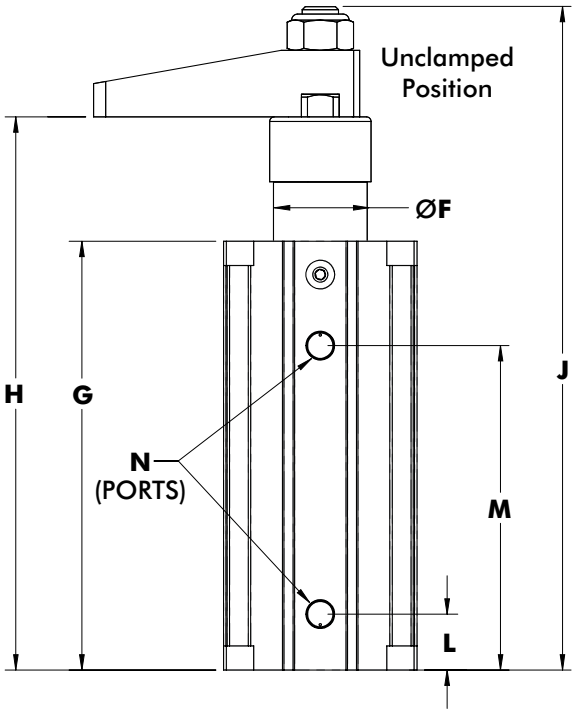

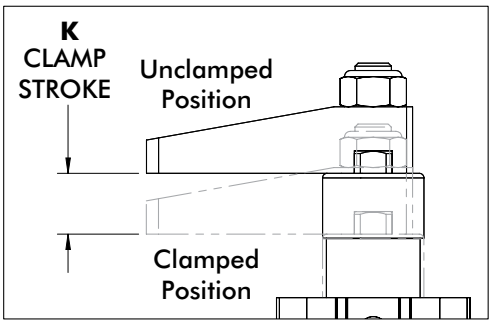

Shown with optional clamping arm.

Model	A	B	C	D	E	F	G	H	J	K	L	M	N
9522-2	[1.42] 36	[1.00] 25,4	M5 (#10)	--	--	[0.82] 21	[3.77] 95,8	[4.79] 121,8	[5.72] 145,7	[0.50] 13	[0.43] 11	[2.90] 73,8	M5
9530-2	[1.81] 46	[1.34] 34	M6 (1/4")	[0.55] 14	[0.16] 4	[0.96] 24,4	[4.48] 113,7	[6.09] 154,8	[7.33] 186	[0.79] 20	[0.61] 15,5	[3.39] 86,2	1/8NPT
9530-2G													G-1/8
9540-2	[2.05] 52	[1.57] 40			[0.20] 5	[1.13] 28,7	[4.63] 117,6	[6.29] 159,7	[7.52] 190,9		[0.65] 16,5	[3.43] 87,1	1/8NPT
9540-2G													G-1/8
9550-2	[2.52] 64	[1.97] 50	M8 (5/16")	[0.71] 18	[0.28] 7	[1.32] 33,5	[5.58] 141,8	[7.20] 182,9	[8.64] 219,3		[0.73] 18,5	[4.22] 107,3	1/8NPT
9550-2G													G-1/8

9500 SERIES

Pneumatic Swing Clamps | Clamping Forces

Series 9522-2 Clamping Force

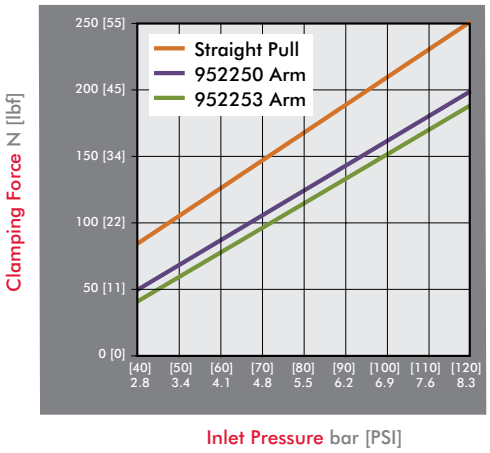

Series 9530-2 Clamping Force

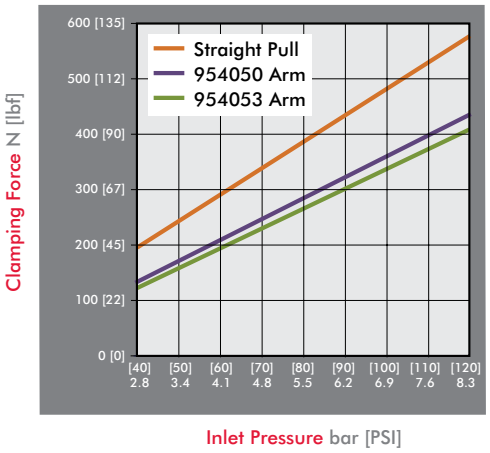

Series 9540-2 Clamping Force

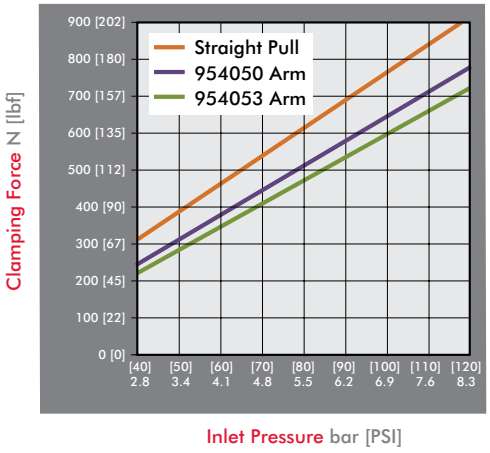

Series 9550-2 Clamping Force

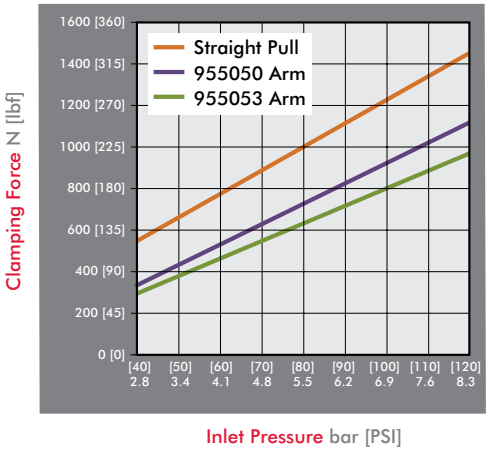

Guidelines

DESTACO Pneumatic Swing Clamps are designed for long life when using standard clamping arms and spindles. In the event that a longer arm or additional weight is needed, please consult these charts for the allowable weight and length.

Example: 9522-2
At a weight of 80 gr, the maximum length of the arm is approximately 120mm.

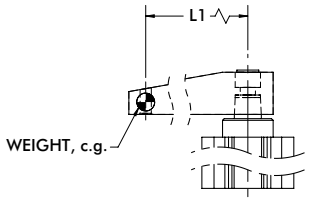

All data refers to an operating pressure of 5 bar [72psi] and an opening and closing time of 1 second.

9522-2 Clamp Arm Weight

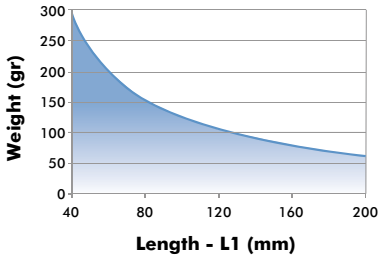

9530-2 Clamp Arm Weight

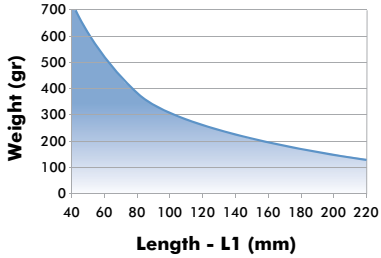

9540-2 Clamp Arm Weight

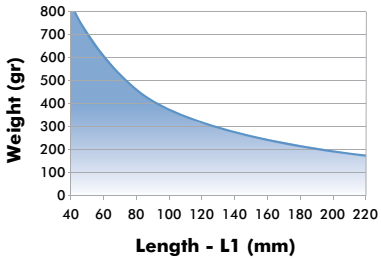

9550-2 Clamp Arm Weight

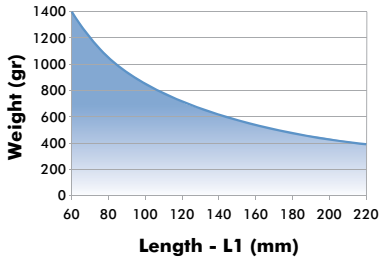

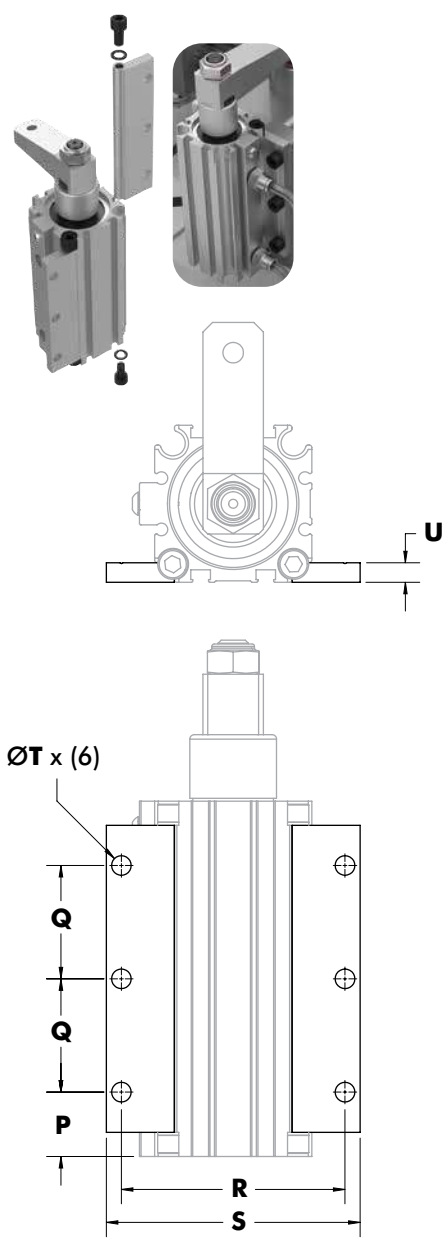

Optional Side Flange Mounting

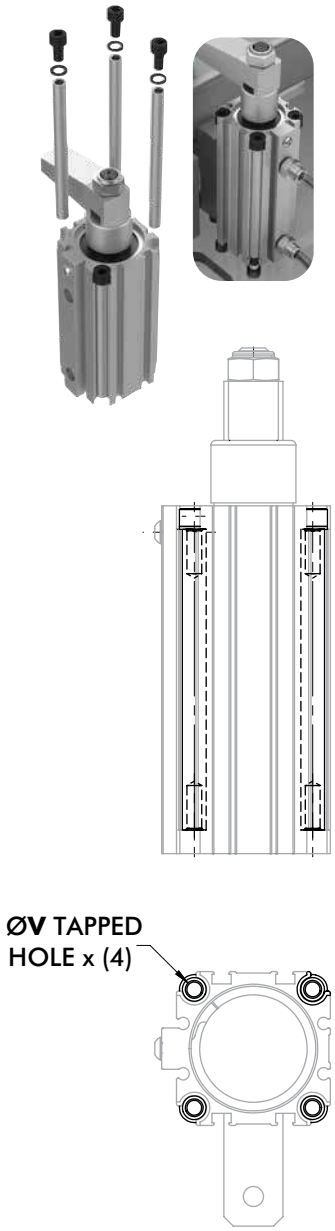

Optional Tapped Hole Mount

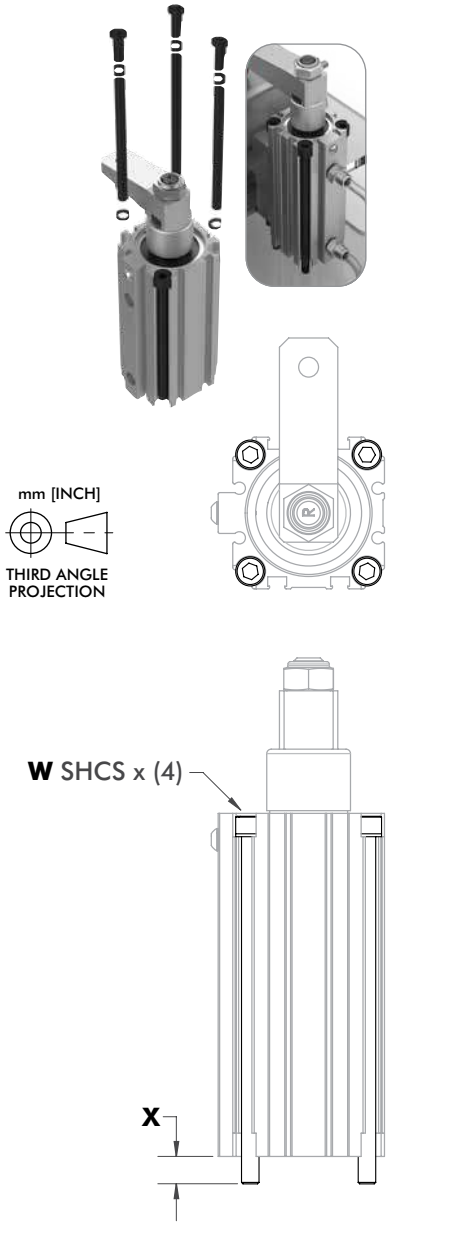

Optional Standard Mount

Model	P	Q	R	S	T	U	V	W	X	Side Flange Kit	Tapped Hole Kit	Standard Mount Kit
9522-2	[0.41] 10,4	[1.48] 37,5	[1.91] 48,5	[2.26] 57,5	[0.22] 5,5	[0.22] 5,5	M5	M5x100	[0.36] 9,2	952260	952261	952262
9530-2 9530-2G	[0.76] 19,4		[2.68] 68	[3.07] 78	[0.26] 6,5	[0.26] 6,5	M6	M6x120	[0.52] 13,3	953060	953061	953062
9540-2 9540-2G	[0.84] 21,3		[2.91] 74	[3.31] 84					[0.37] 9,4	954060	954061	
9550-2 9550-2G	[0.82] 20,9	[1.97] 50	[3.66] 93	[4.17] 106	[0.33] 8,5	[0.31] 8	M8	M8x150	[0.59] 15	955060	955061	955062

Refer to NPN-9500-2 for mounting instructions

9500 SERIES

Pneumatic Swing Clamps | Clamping Arms

Features:

- Lightweight aluminum construction
- Designed for use with 9500-2 series clamps

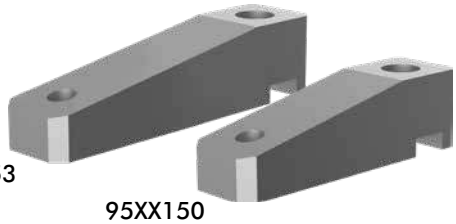

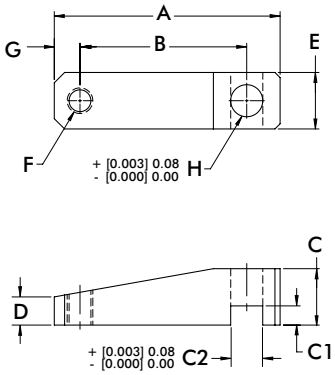

Part Number	Used with Model	A	B	C	C1	C2	D	E	F	G	H	Weight [lbs] kg
9522150	9522-2	[2.28] 58	[1.77] 45	[0.59] 15	[0.16] 4	[0.315] 8,01	[0.30] 7.50	[0.59] 15	M6	[0.20] 5	[0.315] 8,00	[0.06] 0,025
9522153		[3.07] 78	[2.56] 65									[0.08] 0,034
9540150	9530-2, 9540-2	[2.76] 70	[1.97] 50	[0.79] 20	[0.18] 4,6	[0.394] 10,01	[0.39] 10	[0.79] 20	M8	[0.39] 10	[0.394] 10,00	[0.12] 0,054
9540153		[3.94] 100	[3.15] 80									[0.17] 0,079
9550150	9550-2	[3.46] 88	[2.56] 65	[0.87] 22	[0.30] 7,5	[0.493] 12,51	[0.43] 11	[0.87] 22	M10		[0.492] 12,50	[0.18] 0,081
9550153		[4.45] 113	[3.54] 90									[0.23] 0,11

Dimensions and technical information are subject to change without notice

Features:

- Swing direction is field adjustable between left, right, or straight. (20mm not linear adjustable)
- Switch ready for Ø4mm or 6.5mm x 5mm sensors
- Lightweight and robust, designed for several million cycles
- Clamp arm sold separately

Applications:

- Assembly
- Welding
- Light machining

Also Available:

See page MC-PSC-11 thru 13 for clamping arms and mounting accessories

See page MC-PSC-40 for sensing options

89R

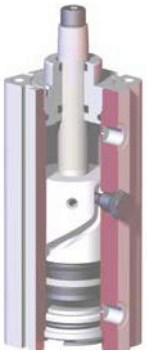

Technical Information

Model	Swing Direction*	Total Stroke [in]mm	Stroke During Rotation [in]mm	Vertical Clamp Stroke [in]mm	Clamping Force† [lbf]N	Bore Size [in]mm	Air Consumption‡ [ft³]dm³	Weight [lb.]kg	Replacement Seal Kit
89R20-010-2	LH, RH	[0.83] 21	[0.43] 11	[0.39] 10	[18] 80	[0.79] 20	[0.002] 0,07	[0.66] 0,3	89R20-00
89R32-010-2	LH, RH, STRT	[1.10] 28	[0.61] 18		[55] 245	[1.26] 32	[0.009] 0,25	[1.32] 0,6	89R32-00
89R40-010-2		[1.24] 31,5	[0.85] 21,5		[85] 380	[1.57] 40	[0.015] 0,43	[2.09] 0,95	89R40-00
89R40-025-2		[1.83] 46,5		[0.98] 25			[0.022] 0,63	[2.43] 1,1	
89R50-025-2		[2.05] 52	[1.06] 27		[138] 614	[1.97] 50	[0.040] 1,13	[3.97] 1,8	89R50-00
89R63-025-2		[2.30] 58,5	[1.32] 33,5		[218] 970	[2.48] 63	[0.072] 2,04	[6.17] 2,8	89R63-00

*Swing direction is field adjustable. †with standard clamping arm 5bar [72psi]. ‡per double stroke at 5bar [72psi]

Operating Pressure Range: 3bar [45psig] to 8bar [120psig]
Maximum Operating Temperature: 60°C [140°F]

Note:
Switches are optional. To order with (2) 8EA-109-1 switches, add **A** to the end of the model. Ex. 89R32-010-2**A**

89R SERIES

Pneumatic Swing Clamps | Dimesnsions

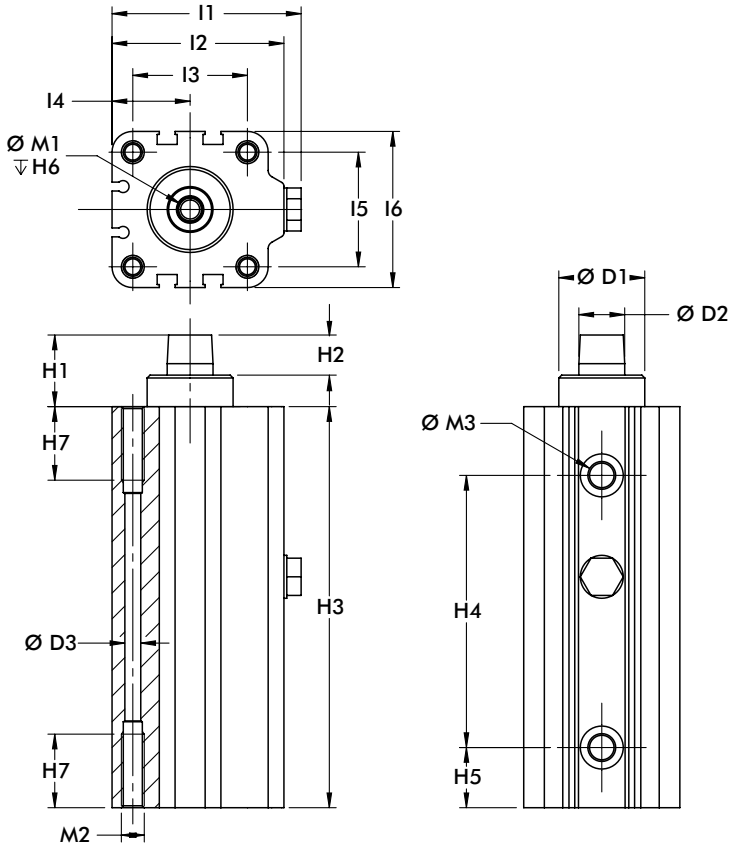

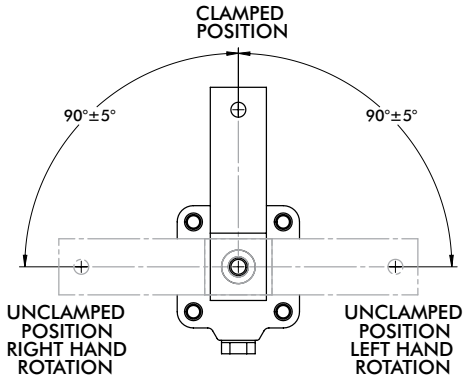

mm [INCH]

THIRD ANGLE PROJECTION

Model	ØD1 H9	ØD2 F7	ØD3	H1	H2	H3	H4	H5	H6	H7	L1	L2
89R20-010-2	[0.71] 18	[0.39] 10	[0.18] 4,6	[0.78] 19,8	[0.47] 11,9	[4.15] 105,5	[2.60] 66	[0.52] 13,2	[0.59] 15	[0.55] 14	[1.56] 39,5	[1.38] 35
89R32-010-2	[0.87] 22	[0.47] 12	[0.22] 5,5	[0.93] 23,7	[0.43] 11	[4.92] 125	[3.27] 83	[0.69] 17,5	[0.67] 17	[0.63] 16	[2.36] 60	[2.13] 54
89R40-010-2	[1.18] 30	[0.63] 16		[0.98] 25		[5.51] 140	[3.74] 95	[0.83] 21		[0.98] 25	[2.60] 66	[2.36] 60
89R40-025-2						[6.69] 170	[4.92] 125					
89R50-025-2	[1.57] 40	[0.71] 18	[0.29] 7,4	[1.24] 31,4		[7.70] 195,5	[5.39] 137	[1.05] 26,7	[0.98] 25		[3.09] 78,5	[2.85] 72,5
89R63-025-2	[1.77] 45	[0.78] 20	[0.37] 9,3	[1.30] 33	[0.59] 15	[8.33] 211,5	[6.08] 154,5	[1.04] 26,5			[3.74] 95	[3.46] 88

Model	L3	L4	L5	L6	M1	M2	M3
89R20-010-2	[0.87] 22	[0.63] 16	[0.87] 22	[1.26] 32	M5	M6	M5
89R32-010-2	[1.42] 36	[0.94] 24	[1.26] 32	[1.77] 45	M6	M8	G-1/8
89R40-010-2	[1.57] 40	[1.07] 27,3	[1.57] 40	[2.15] 54,5	M8		
89R40-025-2							
89R50-025-2	[1.97] 50	[1.28] 32,5	[1.97] 50	[2.56] 65	M10	M10	
89R63-025-2	[2.44] 62	[1.57] 40	[2.44] 62	[3.15] 80		M12	G-1/4

Dimensions and technical information are subject to change without notice

Series 89R Clamping Force
(w/ standard clamping arm)

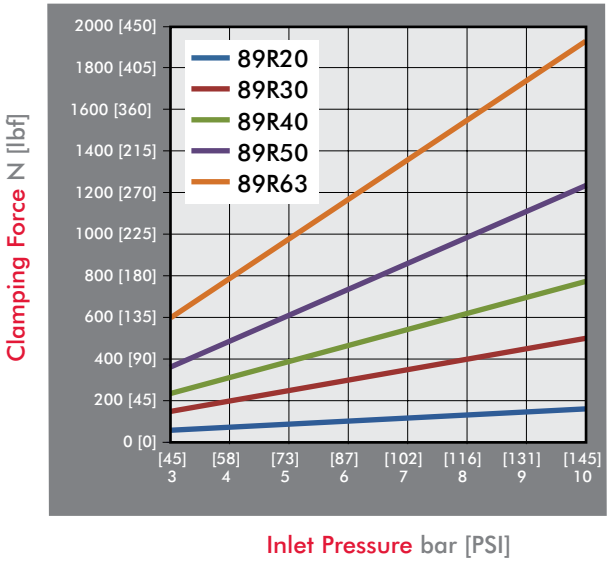

Guidelines

DESTACO Pneumatic Swing Clamps are designed for long life when using standard clamping arms and spindles. In the event that a longer arm or additional weight is needed, please consult these charts for the allowable weight and length.

Example: 89R32
At a weight of 80 gr, the maximum length of the arm is approximately 90mm.

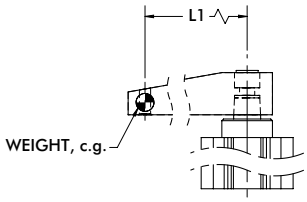

All data refers to an operating pressure of 5 bar [72psi] and an opening and closing time of 1 second.

89R20 & 89R32 Clamp Arm Weight

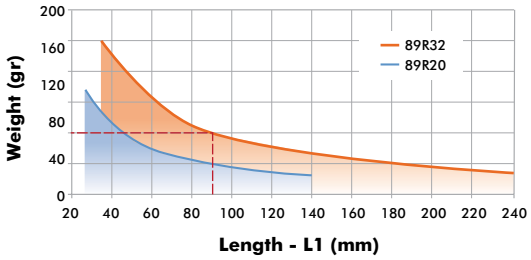

89R40 & 89R50 Clamp Arm Weight

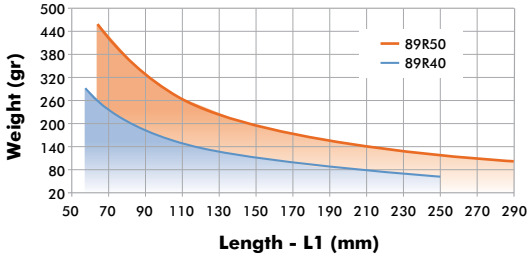

89R63 Clamp Arm Weight

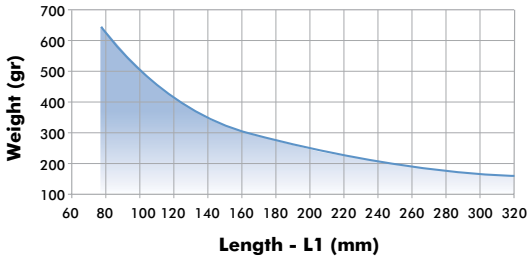

89R SERIES

Pneumatic Swing Clamps | Clamping Arms

Features:

- Lightweight aluminum construction
- Locking tapered connection for 360 deg. arm positioning

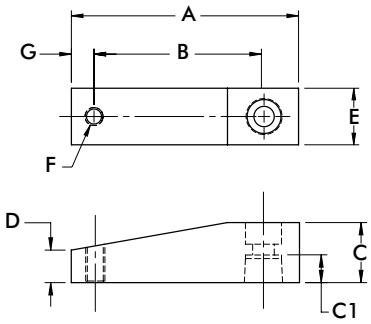

Part Number	Used with Model	A	B	C	C1	D	E	F	G	Weight [lbs] kg
8JG-215-1	89R20-010-2	[2.64] 67	[2.05] 52	[0.59] 15	[0.33] 8,5	[0.33] 8,5	[0.59] 15	M6	[0.28] 7	[0.08] 0,04
8JG-217-1	89R32-010-2	[3.15] 80	[2.36] 60	[0.79] 20	[0.37] 9,5		[0.79] 20	M8	[0.39] 10	[0.14] 0,06
8JG-218-1	89R40-010-2, 89R40-025-2	[3.74] 95	[2.76] 70	[0.98] 25	[0.45] 11,5	[0.55] 14	[0.98] 25			[0.28] 0,13
8JG-219-1	89R50-025-2	[4.17] 106	[3.15] 80	[1.18] 30	[0.59] 15	[0.57] 14,5	[1.18] 30			[0.42] 0,19
8JG-220-1	89R63-025-2	[4.72] 120	[3.54] 90	[1.38] 35	[0.67] 17	[0.67] 17	[1.38] 35	M10	[0.47] 12	[0.66] 0,30

Clamping Arm Adapters

Features:

- For attaching custom made clamp arms
- 360° rotatable arm
- Aluminum construction

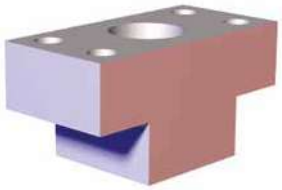

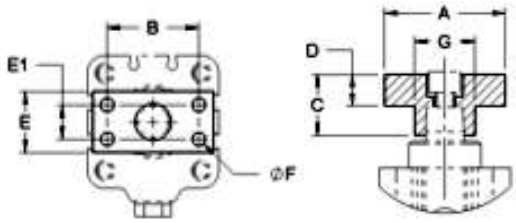

Part Number	Used with Model	A	B	C	D	E	E1	F	Weight [lbs] kg
8MA-084-1	89R20-010-2	[1.57] 40	[1.10] 28	[0.59] 15	[0.32] 8	[0.59] 15	--	[0.22] 5,5 (2x)	[0.03] 0,014
8MA-086-1	89R32-010-2	[1.97] 50	[1.38] 35	[0.79] 20	[0.43] 11	[0.79] 20			[0.08] 0,035
8MA-087-1	89R40-010-2, 89R40-025-2		[1.50] 38	[0.98] 25	[0.51] 13	[0.98] 25	[0.55] 14	[0.22] 5,5 (4x)	[0.11] 0,050
8MA-088-1	89R50-025-2	[2.36] 60	[1.77] 45	[1.18] 30	[0.59] 15	[1.18] 30	[0.59] 15	[0.28] 7 (4x)	[0.19] 0,085
8MA-089-1	89R63-025-2	[2.56] 65	[1.89] 48	[1.38] 35	[0.67] 17	[1.38] 35	[0.71] 18	[0.35] 9 (4x)	[0.28] 0,125

Dimensions and technical information are subject to change without notice

Pneumatic Swing Clamps | Body Mount Flanges

Features:

- For recessed mounting
- Variable height adjustment
- Can be used with switches
- For use with the **89R** Series Pneumatic Swing Clamps

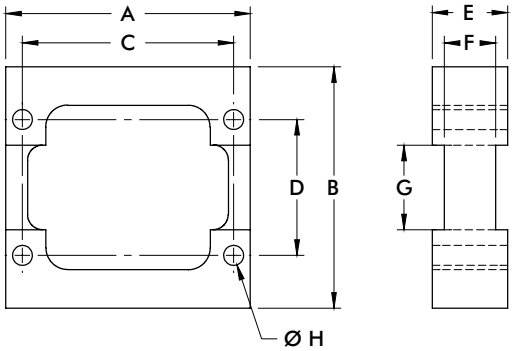

Part Number	Used with Model	A	B	C	D	E	F	G	H	Weight [lbs] kg
8MA-092-1	89R20-010-2	[2.24] 57	[2.17] 55	[1.85] 47	[0.94] 24	[0.59] 15	--	--	[0.28] 5,5	[0.22] 0,10
8MA-094-1	89R32-010-2	[3.19] 81	[2.95] 75	[2.55] 70	[1.57] 40	[0.79] 20	[0.47] 12	[0.98] 25	[0.26] 6,6	[0.44] 0,20
8MA-095-1	89R40-010-2		[3.15] 80		[1.77] 45	[0.98] 25	[0.67] 17	[1.10] 28		[0.55] 0,25
	89R40-025-2									
8MA-096-1	89R50-025-2	[4.00] 101,5	[3.94] 100	[3.37] 85,5	[1.97] 50			[1.46] 37	[0.35] 9	[0.88] 0,40

Mounting Feet

Features:

- Can be mounted on bottom side or front side
- Can be mounted on 4 sides of the cylinder
- For use with **89R** Series Pneumatic Swing Clamps

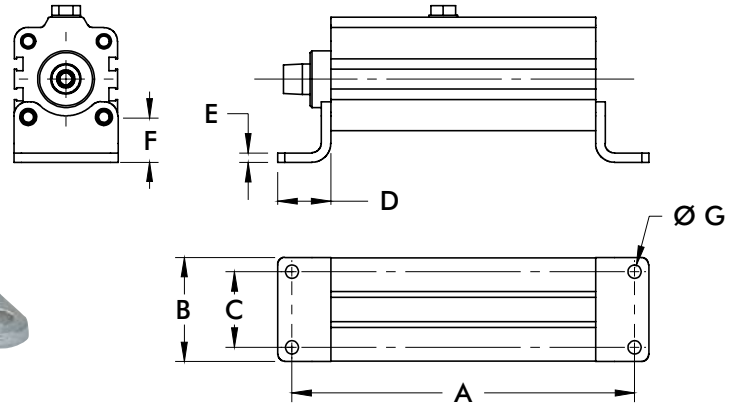

Part Number	Used with Model	A	B	C	D	E	F	G	Weight [lbs] kg
8MW-018-1	89R20-010-2	[5.41] 137,5	[1.38] 35	[0.87] 22	[0.87] 22	[0.16] 4	[0.63] 16	[0.28] 7	[0.08] 0,04
8MW-020-1	89R32-010-2	[6.54] 166	[1.97] 50	[1.38] 35	[1.10] 28	[0.20] 5	[0.71] 18		[0.15] 0,07
8MW-021-1	89R40-010-2	[7.13] 181	[2.17] 55	[1.57] 40			[0.94] 24		[0.22] 0,10
	89R40-025-2	[8.31] 211							
8MW-022-1	89R50-025-2	[9.39] 238,5	[2.64] 67	[1.97] 50	[1.26] 32	[0.24] 6		[0.35] 9	[0.33] 0,15
8MW-023-1	89R63-025-2	[10.37] 263,5	[3.35] 85	[2.44] 62	[1.57] 40		[1.06] 27	[0.43] 11	[0.52] 0,24

89R SERIES

Pneumatic Swing Clamps | End Mount Flanges

Features:

- Can be mounted on bottom side or top side
- For use with **89R** Pneumatic Swing Clamps

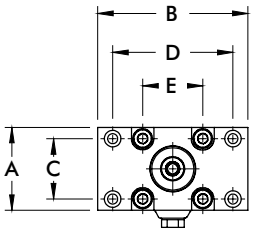

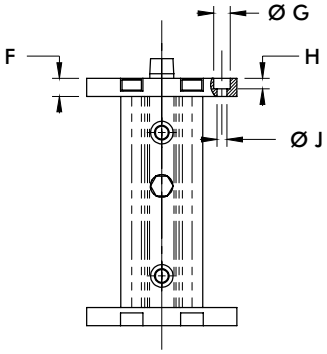

Part Number	Used with Model	A	B	C [±0.008] ±0,2	D [±0.008] ±0,2	E	F	G	H	J	Weight [lbs]kg
8MA-061-1	89R20-010-2	[1.26] 32	[2.56] 65	[0.71] 18	[1.97] 50	[0.87] 22	[0.39] 10	[0.43] 11	[0.28] 7	[0.26] 6,6	[0.07] 0,03
8MA-063-1	89R32-010-2	[1.97] 50	[3.15] 80	[1.26] 32	[2.52] 64	[1.26] 32	[0.47] 12				[0.20] 0,09
8MA-064-1	89R40-010-2, 89R40-025-2	[2.17] 55	[3.94] 100	[1.57] 40	[3.15] 80	[1.57] 40					[0.29] 0,13
8MA-065-1	89R50-025-2	[2.56] 65	[4.72] 120	[1.77] 45	[3.94] 100	[1.97] 50	[0.59] 15	[0.59] 15	[0.35] 9	[0.33] 8,5	[0.46] 0,21
8MA-066-1	89R63-025-2	[3.15] 80	[5.12] 130	[2.36] 60	[4.33] 110	[2.44] 62				[0.35] 8,8	[0.66] 0,30

Dimensions and technical information are subject to change without notice

Features:

- Lightweight and robust, designed for several millions cycles
- Can be mounted from the side or the top
- Sensor ready for T-slot style sensors
- Metric design
- Clamp arm sold separately

Applications:

- Assembly
- Welding
- Light machining

Also Available:

See page MC-PSC-17 for clamping arms

See page MC-PSC-40 for sensing options

Series 89B

Technical Information

Model	Swing Direction	Total Stroke [in]mm **S**	Stroke During Rotation [in]mm **S1**	Vertical Clamp Stroke [in]mm **S2**	Clamping Force [lbf.] N†	Bore Size mm[in]	Air Consumption‡ [ft³]dm³	Weight [lb.]kg	Replacement Seal Kit
89B20-010-2R	RH	[0.79] 20	[0.39] 10	[0.39] 10	[29] 130	[0.79] 20	[0.003] 0,08	[1.46] 0,66	89B/E20-2-00
89B20-010-2L	LH								
89B32-010-2R	RH	[0.83] 21	[0.43] 11		[79] 350	[1.25] 32	[0.008] 0,22	[2.25] 1,02	89B/E32-2-00
89B32-010-2L	LH								
89B40-010-2R	RH	[0.94] 24	[0.55] 14		[130] 580	[1.57] 40	[0.014] 0,39	[3.17] 1,44	89B/E40-2-00
89B40-010-2L	LH								
89B50-025-2R	RH	[1.57] 40	[0.59] 15	[0.98] 25	[225] 1000	[1.97] 50	[0.036] 1,03	[5.95] 2,70	89B/E50-2-00
89B50-025-2L	LH								
89B63-008-2R	RH	[1.02] 26	[0.71] 18	[0.32] 8	[321] 1430	[2.48] 63	[0.038] 1,08	[6.39] 2,90	89B/E63-2-00
89B63-008-2L	LH								

† with standard clamping arm at 6bar [87psi]. ‡ per double stroke at 6bar [87psi]

Operating Pressure Range: 3bar [45psig] to 6bar [87psig]
Maximum Operating Temperature: 80°C [176°F]

Note:
Switches are optional. To order clamp with (2) 8EA-109-1 switches, add **A** to the end of the model.
EX. 89B30-010-2R**A**. See page MC-PSC-40 for additional switch options.

89B SERIES

Pneumatic Swing Clamps | Dimensions

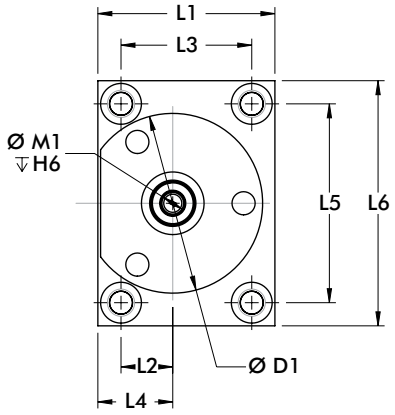

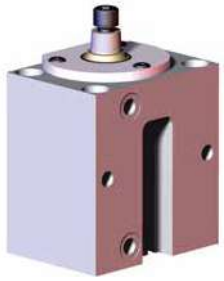

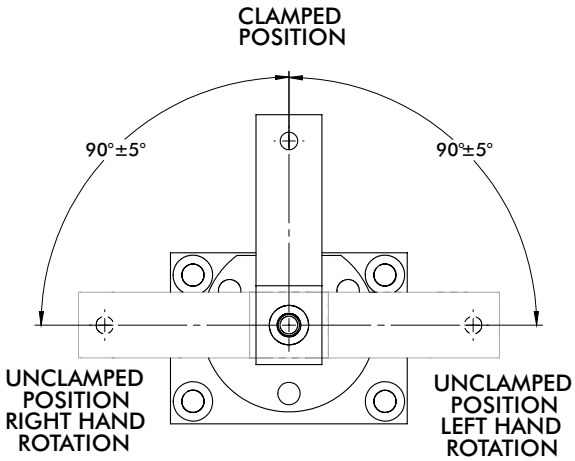

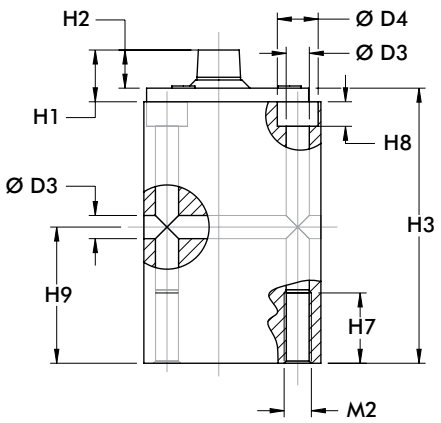

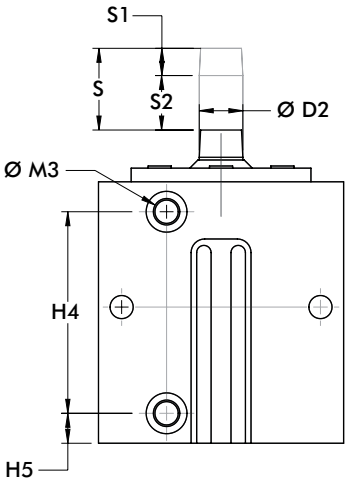

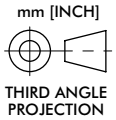

S = Total Stoke
S1 = Stroke during Rotation
S2 = Vertical Clamp Stroke

Model	ØD1	ØD2	ØD3	D4	H1	H2	H3	H4	H5	H6	H7	H8	H9	L1
89B20	[1.89] 48	[0.39] 10	[0.26] 6,6	[0.43] 11	[0.69] 17,5	[0.35] 9	[3.48] 88.5	[2.28] 58	[0.35] 9	[0.59] 15	[0.79] 20	[0.28] 7	[1.57] 40	[1.77] 45
89B32	[2.20] 56	[0.47] 12	[0.33] 8,5	[0.59] 15	[0.63] 16	[0.43] 11	[3.70] 94	[2.72] 69	[0.39] 10	[0.67] 17	[0.98] 25	[0.35] 9	[1.77] 45	[2.17] 55
89B40	[2.60] 66	[0.63] 16			[0.75] 19	[0.55] 14	[3.98] 101	[2.91] 74	[0.43] 11				[1.97] 50	[2.56] 65
89B50	[3.07] 78	[0.71] 18	[0.41] 10,5	[0.71] 18	[0.98] 25	[0.67] 17	[5.51] 140	[4.29] 109		[0.98] 25	[1.18] 30	[0.43] 11	[2.76] 70	[2.95] 75
89B63	[3.70] 94	[0.79] 20			[1.06] 27	[0.75] 19	[4.53] 115	[3.35] 85					[2.16] 55	[3.54] 90

Model	L2	L3	L4	L5	L6	M1	M2	M3
89B20	[0.45] 11,5	[1.18] 30	[0.75] 19	[2.36] 60	[2.95] 75	M5	M8	M5
89B32	[0.55] 14	[1.50] 38	[0.89] 22,5	[2.68] 68	[3.35] 85	M6	M10	G-1/8
89B40	[0.75] 19	[1.89] 48	[1.08] 27,5	[2.87] 73	[3.54] 90	M8		
89B50	[0.94] 24	[2.17] 55	[1.34] 34	[3.54] 90	[4.33] 110		M12	
89B63	[1.18] 30	[2.76] 70	[1.57] 40	[3.94] 100	[4.72] 120	M10		G-1/4

Mounting Options

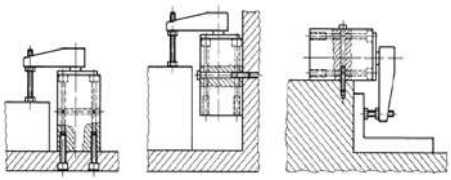

Dimensions and technical information are subject to change without notice

Series 89B Clamping Force
(w/ standard clamping arm)

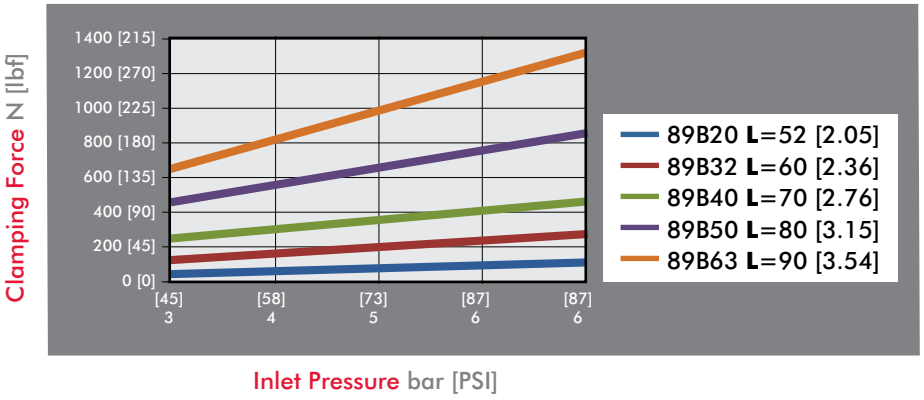

Guidelines

DESTACO Pneumatic Swing Clamps are designed for long life when using standard clamping arms and spindles. In the event that a longer arm or additional weight is needed, please consult these charts for the allowable weight and length.

Example: 89B32
At a weight of 80 gr, the maximum length of the arm is approximately 90mm.

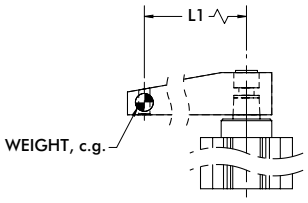

All data refers to an operating pressure of 5 bar [72psi] and an opening and closing time of 1 second.

89B20 & 89B32 Clamp Arm Weight

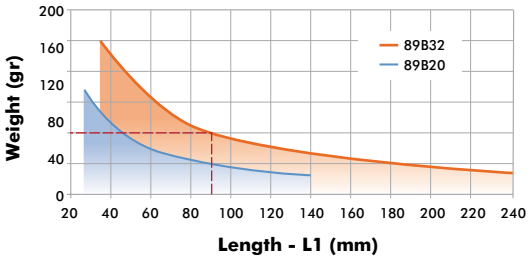

89B40 & 89B50 Clamp Arm Weight

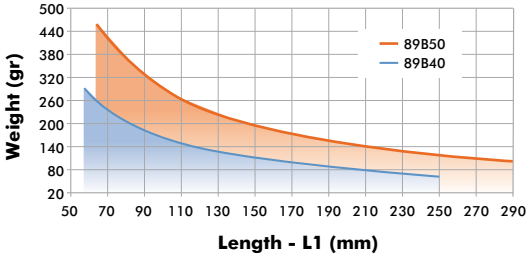

89B63 Clamp Arm Weight

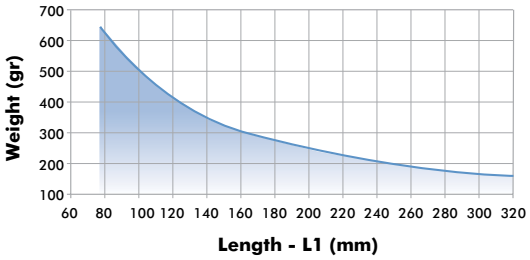

89B SERIES

Pneumatic Swing Clamps | Clamping Arm

Features:

- Lightweight aluminum construction
- Locking tapered connection for 360 deg. arm positioning

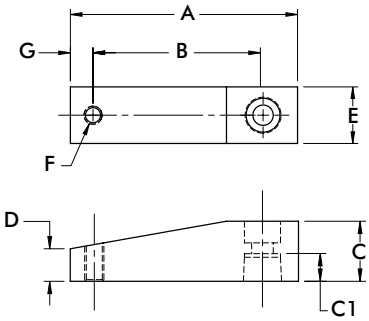

Part Number	Used with Model	A	B	C	C1	D	E	F	G	Weight [lbs] kg
8JG-215-1	89B20-010-2	[2.64] 67	[2.05] 52	[0.59] 15	[0.33] 8,5	[0.33] 8,5	[0.59] 15	M6	[0.28] 7	[0.08] 0,04
8JG-217-1	89B32-010-2	[3.15] 80	[2.36] 60	[0.79] 20	[0.37] 9,5		[0.79] 20	M8	[0.39] 10	[0.14] 0,06
8JG-218-1	89B40-010-2	[3.74] 95	[2.76] 70	[0.98] 25	[0.45] 11,5	[0.55] 14	[0.98] 25			[0.28] 0,13
8JG-219-1	89B50-025-2	[4.17] 106	[3.15] 80	[1.18] 30	[0.59] 15	[0.57] 14,5	[1.18] 30			[0.42] 0,19
8JG-220-1	89B63-008-2	[4.72] 120	[3.54] 90	[1.38] 35	[0.67] 17	[0.67] 17	[1.38] 35	M10	[0.47] 12	[0.66] 0,30

Clamping Arm Adapters

Features:

- For attaching custom made clamp arms
- 360° rotatable arm
- Aluminum construction

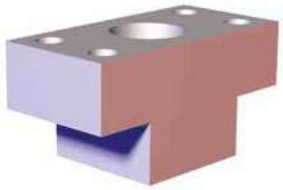

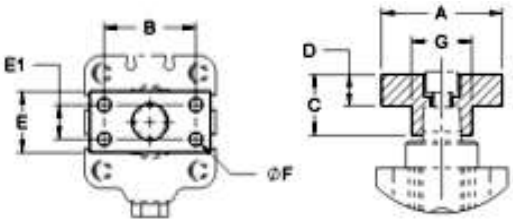

Part Number	Used with Model	A	B	C	D	E	E1	F	Weight [lbs] kg
8MA-084-1	89B20-010-2	[1.57] 40	[1.10] 28	[0.59] 15	[0.32] 8	[0.59] 15	--	[0.22] 5,5 (2x)	[0.03] 0,014
8MA-086-1	89B32-010-2	[1.97] 50	[1.38] 35	[0.79] 20	[0.43] 11	[0.79] 20			[0.08] 0,035
8MA-087-1	89B40-010-2		[1.50] 38	[0.98] 25	[0.51] 13	[0.98] 25	[0.55] 14	[0.22] 5,5 (4x)	[0.11] 0,050
8MA-088-1	89B50-025-2	[2.36] 60	[1.77] 45	[1.18] 30	[0.59] 15	[1.18] 30	[0.59] 15	[0.28] 7 (4x)	[0.19] 0,085
8MA-089-1	89B63-008-2	[2.56] 65	[1.89] 48	[1.38] 35	[0.67] 17	[1.38] 35	[0.71] 18	[0.35] 9 (4x)	[0.28] 0,125

Dimensions and technical information are subject to change without notice

Notes

8100, 8300 SERIES

Pneumatic Swing Clamps | Product Overview

Features:
- Lightweight and robust, designed for several millions cycles
- Block style body may be mounted from the side or the top.
- Sensor ready for use with round style sensors
- Clamp arm and spindle included

Applications:
- Assembly
- Welding
- Light machining

Also Available:
See page MC-PSC-22 for clamping arms

See page MC-PSC-40 for sensing options

8115
Right-hand
Swing

8116
Left-hand
Swing

8315
Right-hand
Swing

8316
Left-hand
Swing

Technical Information

Model	Swing Direction	Total Stroke [in]mm	Stroke During Rotation [in]mm	Vertical Clamp Stroke [in]mm	Clamping Force [lbf.] N†	Bore Size mm[in]	Air Consumption‡ [ft³]dm³	Weight [lb.]kg	Replacement Seal Kit
8115	RH	[0.85] 21,5	[0.47] 11,8	[0.38] 9,7	[25] 110	[18] 80	[0.002] 0,06	[0.68] 0,31	801560
8116	LH								
8315	RH	[1.25] 31,8	[0.75] 19,1	[0.50] 12,7	[89] 400	[67] 298	[0.014] 0,40	[2.00] 0,91	821560
8316	LH								

†with standard clamping arm at 5bar [72psi]. ‡per double stroke at 5bar [72psi]

Operating Pressure Range: 3bar [45psig] to 9bar [130psig]
Maximum Operating Temperature: -18°C to 60°C [0°F to 140°F]

Note:
To order without clamping arm add –**LA**
to the end of the model. Ex. 8315-**LA**

Pneumatic Swing Clamps | Dimensions

Unclamped

Clamped

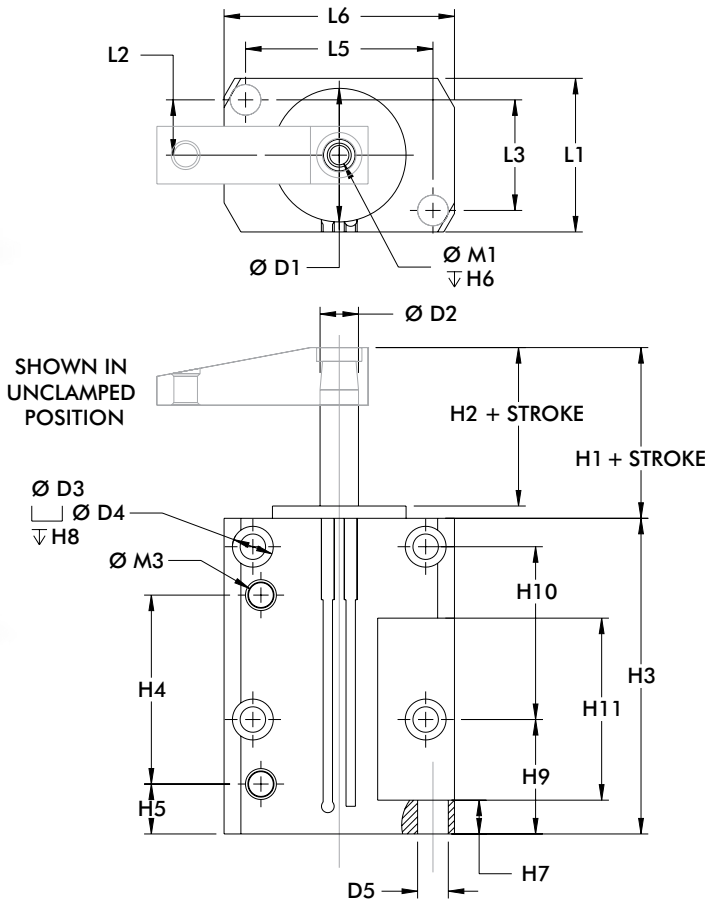

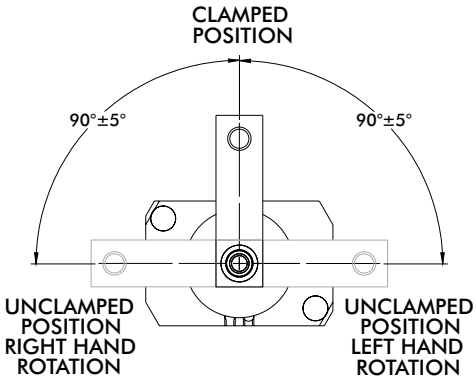

mm [INCH]

THIRD ANGLE PROJECTION

Model	ØD1	ØD2	ØD3	ØD4	ØD5	Stroke	H1	H2	H3	H4	H5	H6
8115 8116	[1.23] 31,2	[0.44] 11,2	[0.20] 5,1	--	--	[0.85] 21,5	[0.53] 13,5	[0.41] 10,4	[3.37] 85,6	[1.45] 36,8	[0.35] 8,9	[0.75] 19,1
8315 8316	[1.74] 44,2	[0.50] 12,7	[0.33] 8,4	[0.53] 13,5	[0.40] 10,2	[1.25] 31,8	[0.97] 24,6	[0.81] 20,6	[4.11] 104,4	[2.46] 62,5	[0.65] 16,5	[0.67] 17

Model	H7	H8	H9	H10	H11	L1	L2	L3	L5	L6	M1	M3
8115 8116	[0.25] 6,4	--	[1.37] 34,8	[1.00] 25,4	[1.00] 25,4	[1.25] 31,8	[0.47] 11,9	[0.94] 23,9	[0.94] 23,9	[1.25] 31,8	¼-20	#10-32
8315 8316	[0.44] 11,2	[1.00] 25,4	[1.49] 37,9	[2.25] 57,2	[2.37] 60,2	[2.00] 50,8	[0.72] 18,3	[1.44] 36,6	[2.44] 62	[3.00] 76,2	5/16/18	1/8 NPT

Mounting Options

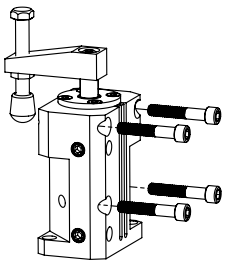

Can be mounted to the side or front of the fixture, or mounted back to back for multiple clamping operations.

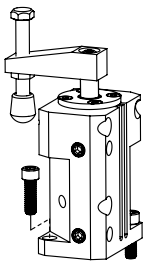

Mounted to the top of the work surface through the two mounting holes in the bottom of unit.

8100, 8300 SERIES

Pneumatic Swing Clamps | Clamping Forces

Series 8100, 8300 Clamping Force
(w/ standard clamping arm)

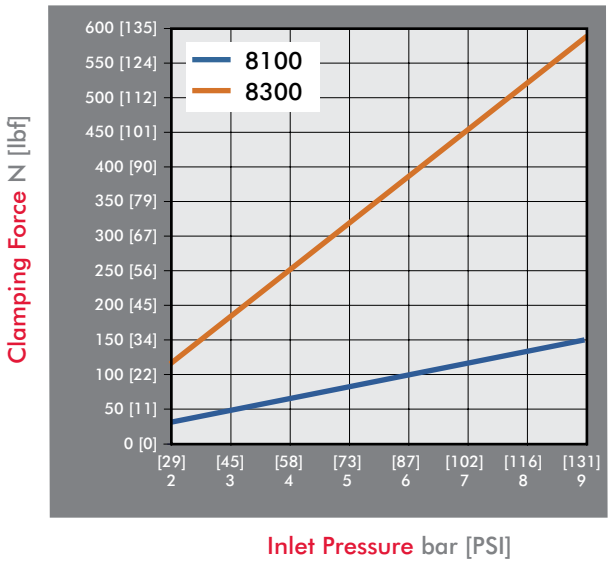

Guidelines

DESTACO Pneumatic Swing Clamps are designed for long life when using standard clamping arms and spindles. In the event that a longer arm or additional weight is needed, please consult these charts for the allowable weight and length.

Example: 8315
At a weight of 80 gr, the maximum length of the arm is approximately 90mm.

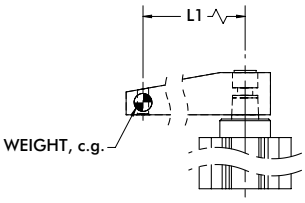

All data refers to an operating pressure of 5 bar [72psi] and an opening and closing time of 1 second.

8115/8116 Clamp Arm Weight

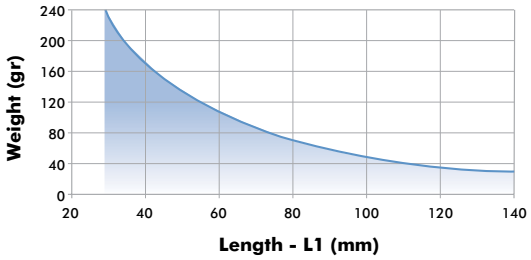

8315/8316 Clamp Arm Weight

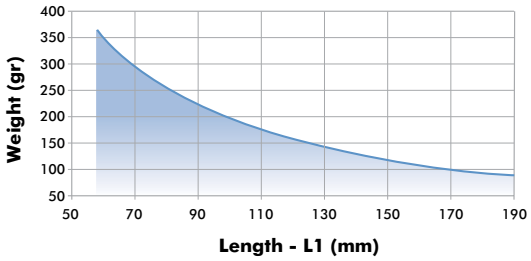

Features:

- Lightweight aluminum construction
- Locking tapered connection for 360 deg. arm positioning

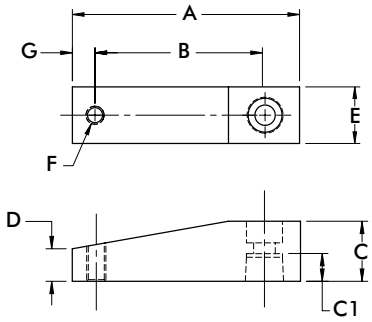

Part Number	Used with Model	A	B	C	C1	D	E	F	G	Weight [lbs] kg
801528	8115, 8116	[1.74] 44,2	[1.11] 28,2	[0.37] 9,4	[0.33] 8,3	[0.25] 6,4	[0.62] 15,7	#10-32	[0.32] 8,1	[0.03] 0,01
801529		[2.87] 72,9	[2.24] 56,9							
821512	8315, 8316	[2.75] 69,9	[2.00] 50,8	[0.75] 19,1	[0.57] 14,5	[0.38] 9,5	[0.75] 19,1	3/8-16	[0.38] 9,5	[0.05] 0,02
821513		[3.75] 95,3	[3.00] 76,2							

Clamping Arm Adapters

Features:

- For attaching custom made clamp arms
- 360° rotatable arm
- Aluminum construction

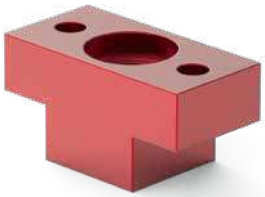

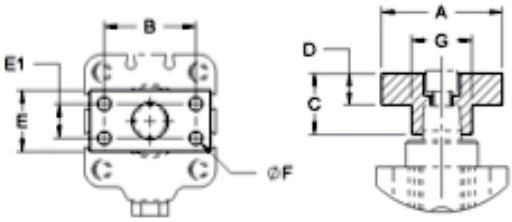

Part Number	Used with Model	A	B	C	D	E	E1	F	Weight [lbs] kg
801532	8115, 8116	[1.37] 34,8	[1.00] 25,4	[0.39] 9,1	[0.25] 6.4	[0.62] 15.7	--	#10-32 (2x)	[0.03] 0,014
821556	8315, 8316	[1.50] 38,1	[1.06] 26,9	[0.75] 19	[0.37] 9,4	[0.75] 19	--	1/4-20 (2x)	[0.05] 0,020

89E SERIES

Pneumatic Swing Clamps | Product Overview

Features:
- Lightweight and robust, designed for several millions cycles
- Threaded body may be mounted in a tapped hole or a clearance hole with optional mounting flange
- Metric design
- Clamp arm sold separately

Applications:
- Assembly
- Welding
- Light machining

Also Available:
See page MC-PSC-26 for clamping arms

See page MC-PSC-27 for mounting flanges

Series 89E

Technical Information

Model	Swing Direction	Total Stroke [in]mm **S**	Stroke During Rotation [in]mm **S1**	Vertical Clamp Stroke [in]mm **S2**	Clamping Force [lbf.] N†	Bore Size mm[in]	Air Consumption‡ [ft³]dm³	Weight [lb.]kg	Replacement Seal Kit
89E20-010-2R	RH	[0.79] 20	[0.39] 10	[0.39] 10	[29] 130	[0.79] 20	[0.003] 0,08	[0.64] 0,29	89B/E20-2-00
89E20-010-2L	LH								
89E32-010-2R	RH	[0.83] 21	[0.43] 11		[79] 350	[1.25] 32	[0.008] 0,22	[0.93] 0,42	89B/E32-2-00
89E32-010-2L	LH								
89E40-010-2R	RH	[0.94] 24	[0.55] 14		[130] 580	[1.57] 40	[0.014] 0,39	[1.76] 0,80	89B/E40-2-00
89E40-010-2L	LH								
89E50-025-2R	RH	[1.57] 40	[0.59] 15	[0.98] 25	[225] 1000	[1.97] 50	[0.036] 1,03	[3.22] 1,46	89B/E50-2-00
89E50-025-2L	LH								
89E63-008-2R	RH	[1.02] 26	[0.71] 18	[0.32] 8	[321] 1430	[2.48] 63	[0.038] 1,08	[3.68] 1,67	89B/E63-2-00
89E63-008-2L	LH								

† with standard clamping arm at 6bar [87psi]. ‡ per double stroke at 6bar [87psi]

Operating Pressure Range: 3bar [45psig] to 10bar [145psig] (89E20 8bar [116psig] max.)
Maximum Operating Temperature: 80°C [176°F]

Dimensions and technical information are subject to change without notice

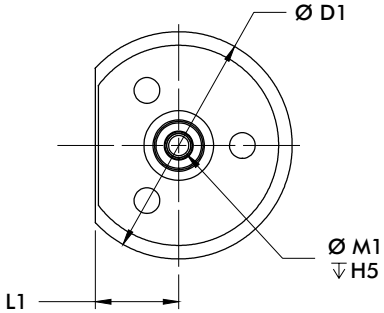

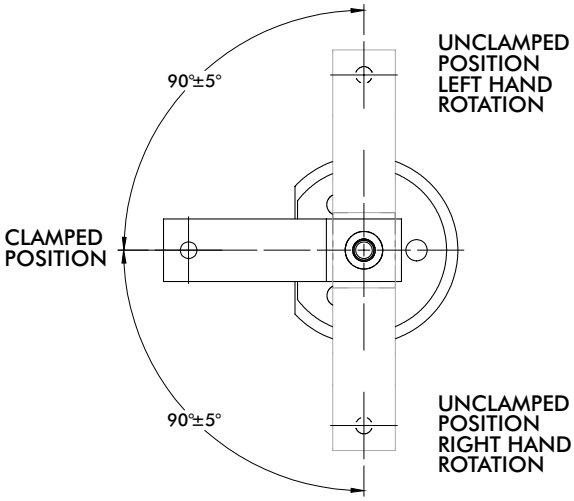

S = Total Stoke
S1 = Stroke during Rotation
S2 = Vertical Clamp Stroke

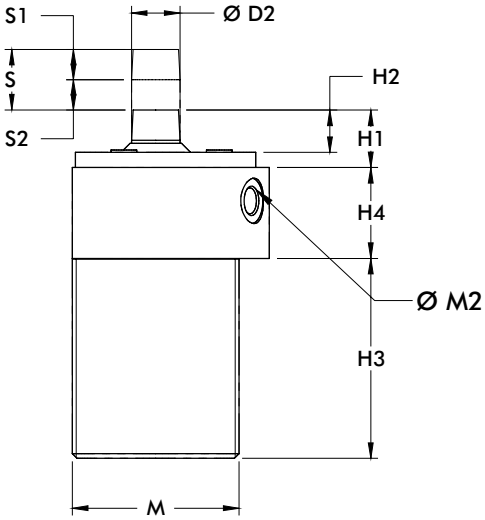

mm [INCH]

THIRD ANGLE PROJECTION

Model	ØD1	ØD2	H1	H2	H3	H4	H5	L1	M	M1	M2
89E20	[1.89] 48	[0.39] 10	[0.69] 17,5	[0.35] 9	[2.36] 60	[0.79] 20	[0.59] 15	[0.75] 19	M36X1,5	M5	M5
89E32	[2.52] 64	[0.47] 12	[0.63] 16	[0.43] 11	[2.72] 69		[0.67] 17	[0.89] 22,5	M42X1,5	M6	
89E40	[2.95] 75	[0.63] 16	[0.75] 19	[0.55] 14	[2.60] 66			[1.08] 27,5	M55X2	M8	G-1/8
89E50	[3.54] 90	[0.71] 18	[0.98] 25	[0.67] 17	[4.09] 104	[1.18] 30	[0.98] 25	[1.36] 34,5	M68X2	M10	
89E63	[4.13] 105	[0.79] 20	[1.06] 27	[0.75] 19	[3.03] 77			[1.57] 40	M80X2		G-1/4

Mounting Options

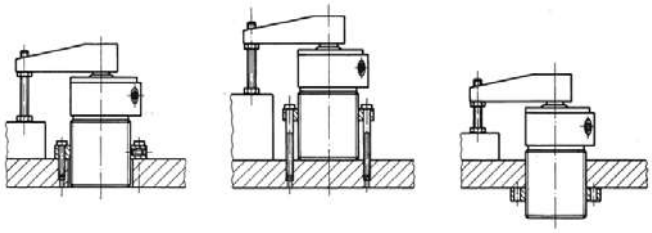

89E SERIES

Pneumatic Swing Clamps | Clamping Forces

Series 89E Clamping Force
(w/ standard clamping arm)

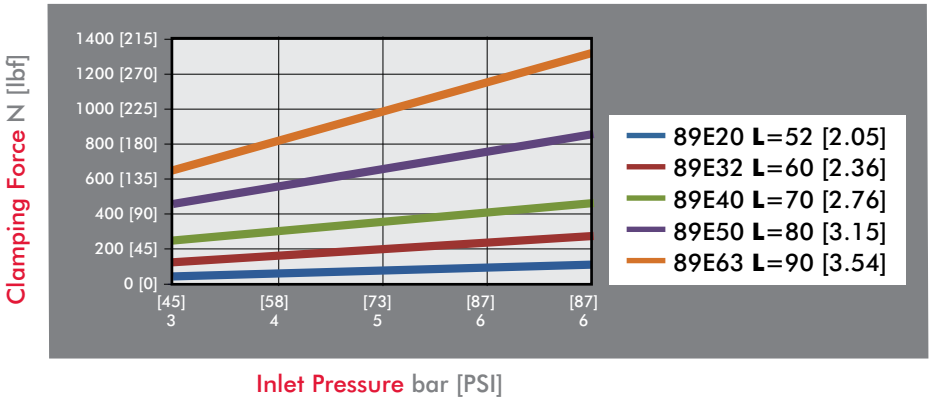

Guidelines

DESTACO Pneumatic Swing Clamps are designed for long life when using standard clamping arms and spindles. In the event that a longer arm or additional weight is needed, please consult these charts for the allowable weight and length.

Example: 89E32
At a weight of 80 gr, the maximum length of the arm is approximately 90mm.

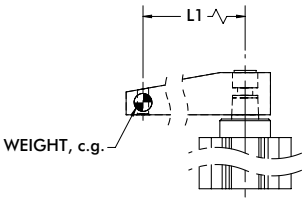

All data refers to an operating pressure of 5 bar [72psi] and an opening and closing time of 1 second.

89E20 & 89E32 Clamp Arm Weight

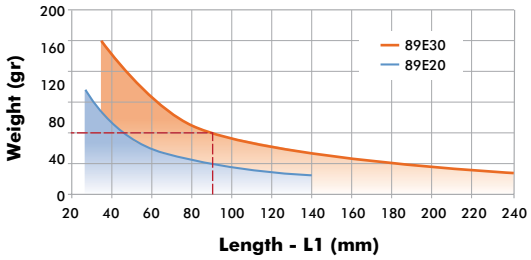

89E40 & 89E50 Clamp Arm Weight

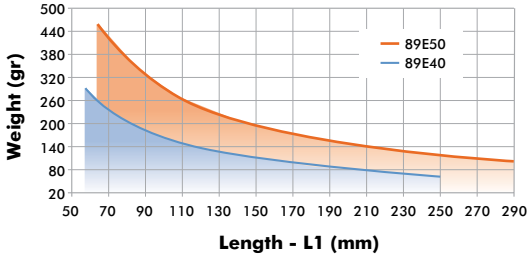

89E63 Clamp Arm Weight

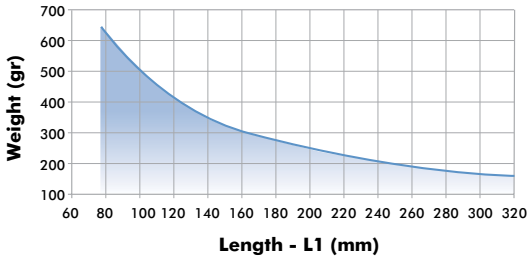

Pneumatic Swing Clamps | Clamping Arms

Features:

- Lightweight aluminum construction
- Locking tapered connection for 360 deg. arm positioning

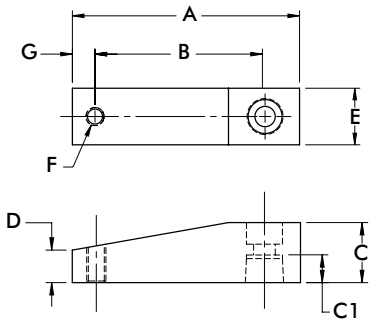

Part Number	Used with Model	A	B	C	C1	D	E	F	G	Weight [lbs] kg
8JG-215-1	89E20-010-2	[2.64] 67	[2.05] 52	[0.59] 15	[0.33] 8,5	[0.33] 8,5	[0.59] 15	M6	[0.28] 7	[0.08] 0,04
8JG-217-1	89E32-010-2	[3.15] 80	[2.36] 60	[0.79] 20	[0.37] 9,5		[0.79] 20	M8	[0.39] 10	[0.14] 0,06
8JG-218-1	89E40-010-2	[3.74] 95	[2.76] 70	[0.98] 25	[0.45] 11,5	[0.55] 14	[0.98] 25			[0.28] 0,13
8JG-219-1	89E50-025-2	[4.17] 106	[3.15] 80	[1.18] 30	[0.59] 15	[0.57] 14,5	[1.18] 30			[0.42] 0,19
8JG-220-1	89E63-008-2	[4.72] 120	[3.54] 90	[1.38] 35	[0.67] 17	[0.67] 17	[1.38] 35	M10	[0.47] 12	[0.66] 0,30

Clamping Arm Adapters

Features:

- For attaching custom made clamp arms
- 360° rotatable arm
- Aluminum construction

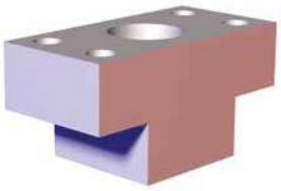

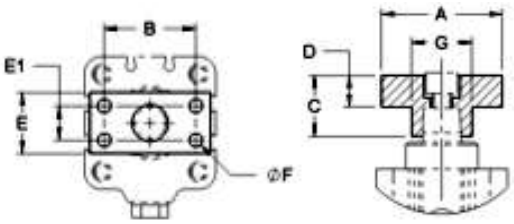

Part Number	Used with Model	A	B	C	D	E	E1	F	Weight [lbs] kg
8MA-084-1	89E20-010-2	[1.57] 40	[1.10] 28	[0.59] 15	[0.32] 8	[0.59] 15	--	[0.22] 5,5 (2x)	[0.03] 0,014
8MA-086-1	89E32-010-2	[1.97] 50	[1.38] 35	[0.79] 20	[0.43] 11	[0.79] 20	--		[0.08] 0,035
8MA-087-1	89E40-010-2		[1.50] 38	[0.98] 25	[0.51] 13	[0.98] 25	[0.55] 14	[0.22] 5,5 (4x)	[0.11] 0,050
8MA-088-1	89E50-025-2	[2.36] 60	[1.77] 45	[1.18] 30	[0.59] 15	[1.18] 30	[0.59] 15	[0.28] 7 (4x)	[0.19] 0,085
8MA-089-1	89E63-008-2	[2.56] 65	[1.89] 48	[1.38] 35	[0.67] 17	[1.38] 35	[0.71] 18	[0.35] 9 (4x)	[0.28] 0,125

89E SERIES

Pneumatic Swing Clamps | Mounting Flanges

Features:

- For use with Threaded Body Pneumatic Swing Clamps
- Variable height adjustment
- For recessed mounting

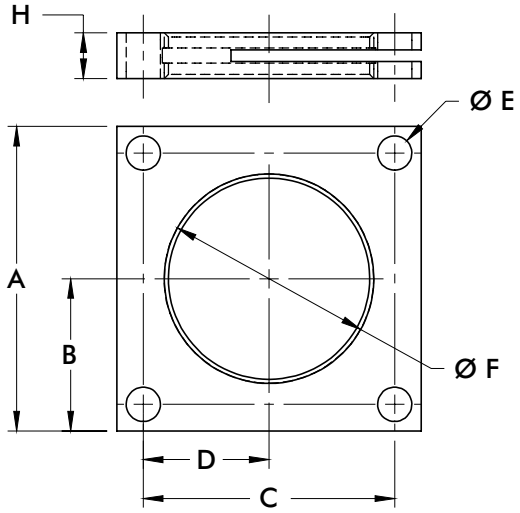

Part Number	Used with Model	A	B	C	D	E	F	H
8MA-219-1	89E20-010-2	[2.17] 55	[4.33] 27,5	[1.65] 42	[0.83] 21	[0.26] 6,6	M36X1,5	[0.31] 8
8MA-220-1	89E32-010-2	[2.76] 70	[1.38] 35	[2.13] 54	[1.06] 27	[0.35] 9	M42X1,5	[0.39] 10
8MA-221-1	89E40-010-2	[3.15] 80	[1.57] 40	[2.60] 66	[1.30] 33		M55X2	[0.47] 12
8MA-222-1	89E50-025-2	[3.54] 90	[1.77] 45	[2.99] 76	[1.50] 38		M68X2	[0.59] 15
8MA-223-1	89E63-008-2	[4.33] 110	[2.17] 55	[3.54] 90	[1.77] 45	[0.43] 11	M80X2	

Dimensions and technical information are subject to change without notice

8000, 8200, 8400 SERIES

Pneumatic Swing Clamps | Product Overview

Features:
- Threaded body may be mounted in a tapped hole or a clearance hole with optional mounting flange. 8215/8216 may be mounted with the upper flange.
- Sensor ready for use with round style sensors
- Clamp arm and spindle included

Applications:
- Assembly
- Welding
- Light machining

Also Available:
See page MC-PSC-31 for clamping arms

See page MC-PSC-31 for mounting flanges

See page MC-PSC-40 for sensing options

8015 Right-hand Swing
8016 Left-hand Swing

8415 Right-hand Swing
8416 Left-hand Swing

8215 Right-hand Swing
8216 Left-hand Swing

Technical Information

Model	Swing Direction	Total Stroke [in]mm	Stroke During Rotation [in]mm	Vertical Clamp Stroke [in]mm	Clamping Force [lbf.] N†	Bore Size [in]mm	Air Consumption‡ [ft³]dm³	Weight [lb.]kg	Replacement Seal Kit
8015	RH	[0.85] 21,5	[0.47] 11,8	[0.38] 9,7	[18] 80	[0.75] 19,1	[0.002] 0,06	[1.0] 0,45	801560
8016	LH								
8215	RH	[1.25] 31,8	[0.75] 19,1	[0.50] 12,7	[67] 300	[1.50] 38,1	[0.015] 0,41	[2.2] 1	821560
8216	LH								
8415	RH				[55] 245	[1.19] 30,2	[0.009] 0,25	[1.5] 0,68	841560
8416	LH								

† with standard clamping arm at 5bar [72psi]. ‡ per double stroke at 5bar [72psi]

Operating Pressure Range: 3bar [45psig] to 9bar [130psig]
Maximum Operating Temperature: 60°C [140°F]

Note:
To order without clamping arm add –**LA** to the end of the model. Ex. 8215-**LA**

8000, 8200, 8400 SERIES

Pneumatic Swing Clamps | Dimensions

Unclamped

Clamped

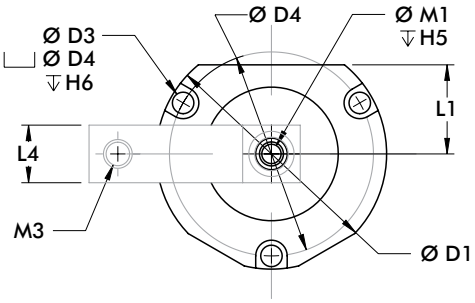

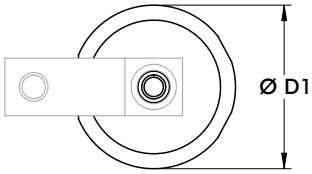

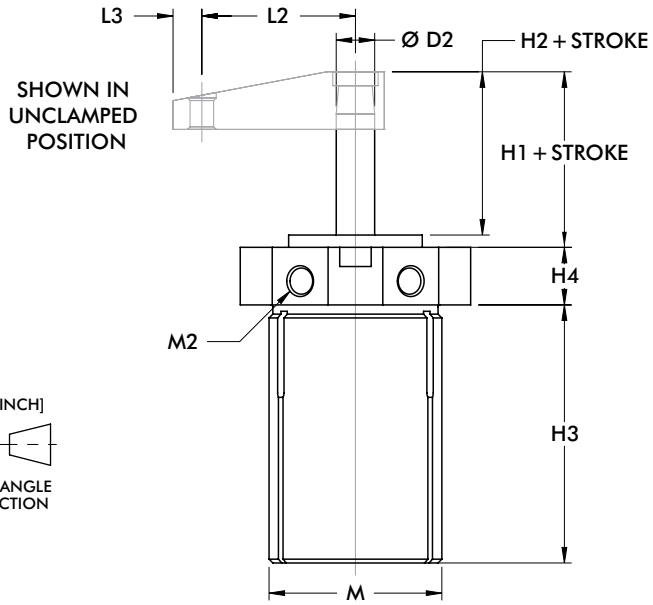

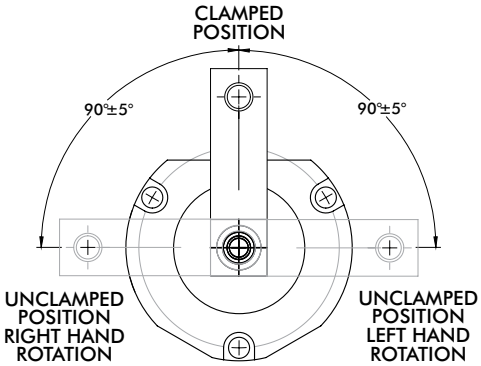

mm [INCH]

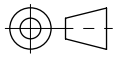

THIRD ANGLE
PROJECTION

Model	ØD1	ØD2	ØD3	ØD4	Stroke	H1	H2	H3	H4	H5	H6	L1
8015 8016	[1.25] 31,8	[0.44] 11,1	--	--	[0.85] 21,5	[0.53] 13,5	[0.41] 10,4	[2.87] 72,9	[0.50] 12,7	[0.75] 19,1	--	--
8215 8216	[3.00] 76,2	[0.50] 12,7	[0.28] 7,1	[2.66] 67,6	[1.25] 31,8	[0.97] 24,6	[0.81] 20,6	[3.36] 85,3	[0.75] 19,1	[0.67] 17	[0.25] 6,4	[1.16] 29,5
8415 8416	[2.13] 54,1		--	--		[0.94] 23,9	[0.78] 19,8	[3.17] 80,5			--	--

Model	L2	L3	L4	M	M1	M2	M3
8015 8016	[1.12] 28,4	[0.31] 7,9	[0.62] 15,7	1-1/8-16	¼-20	#10-32	#10-32
8215 8216	[2.00] 50,8	[0.38] 9,6	[0.75] 19,1	2-1/4-12	5/16-18	1/8 NPT	3/8-16
8415 8416	[1.56] 39,6			1-3/4-12			

Mounting Options

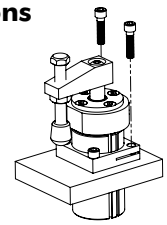

8000, 8200, 8400
Mounted into a tapped hole or a through a clearance hole with the optional mounting flange. Jam nuts are available for 8000.

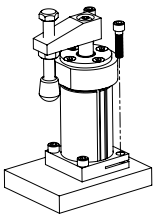

8200 only
Mounted through a clearance hole using mounting screws in the top flange.

Dimensions and technical information are subject to change without notice

Series 8000, 8200, 8400 Clamping Force
(w/ standard clamping arm)

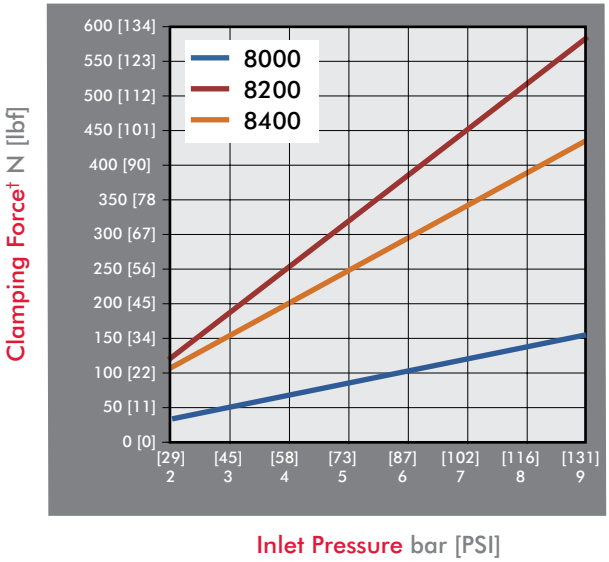

Guidelines

DESTACO Pneumatic Swing Clamps are designed for long life when using standard clamping arms and spindles. In the event that a longer arm or additional weight is needed, please consult these charts for the allowable weight and length.

Example: 8215
At a weight of 80 gr, the maximum length of the arm is approximately 90mm.

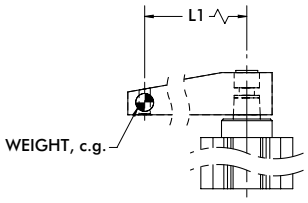

All data refers to an operating pressure of 5 bar [72psi] and an opening and closing time of 1 second.

8015/8016 Clamp Arm Weight

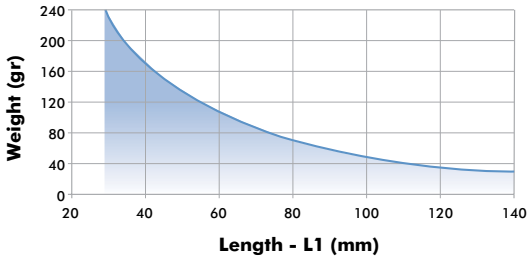

8215/8216 Clamp Arm Weight

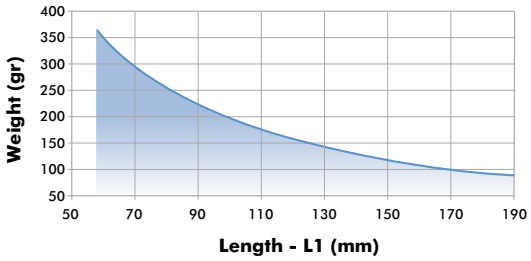

8415/8416 Clamp Arm Weight

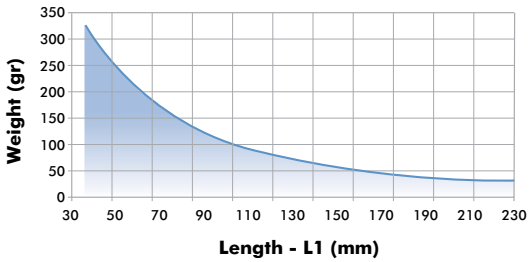

8000, 8200, 8400 SERIES

Pneumatic Swing Clamps | Clamping Arms

Features:

- Lightweight aluminum construction
- Locking tapered connection for 360 deg. arm positioning

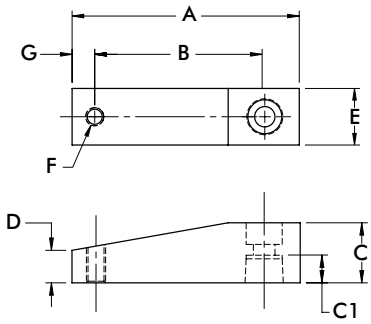

Part Number	Used with Model	A	B	C	C1	D	E	F	G	Weight [lbs] kg
801528	8015, 8016	[1.74] 44,2	[1.11] 28,2	[0.37] 9,4	[0.33] 8,3	[0.25] 6,4	[0.62] 15,7	#10-32	[0.32] 8,1	[0.03] 0,01
801529		[2.87] 72,9	[2.24] 56,9							
821512	8215, 8216, 8415, 8416	[2.75] 69,9	[2.00] 50,8	[0.75] 19,1	[0.57] 14,5	[0.38] 9,5	[0.75] 19,1	3/8-16	[0.38] 9,5	[0.04] 0,02
821513		[3.75] 95,3	[3.00] 76,2							

Clamping Arm Adapters

Features:

- For attaching custom made clamp arms
- 360° rotatable arm
- Aluminum construction

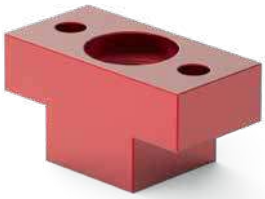

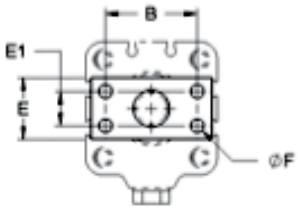

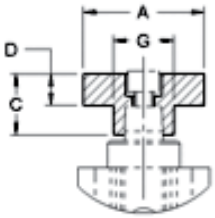

Part Number	Used with Model	A	B	C	D	E	E1	F	Weight [lbs] kg
801532	8015, 8016	[1.37] 34,8	[1.00] 25,4	[0.39]	[0.25]	[0.62]	--	#10-32 (2x)	[0.03] 0,014
821556	8215, 8216	[1.50] 38,1	[1.06] 26,9	[0.75]	[0.37]	[0.75]	--	1/4-20 (2x)	[0.05] 0,020

Mounting Flanges

Features:

- For use with Threaded Body Pneumatic Swing Clamps
- Variable height adjustment
- For recessed mounting

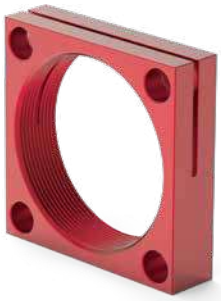

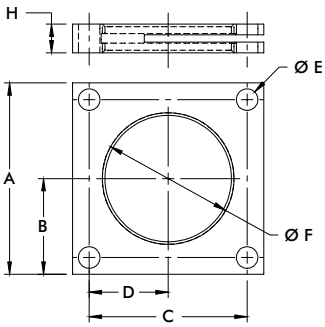

Part Number	Used with Model	A	B	C	D	E	F	H
801553	8015, 8016	[1.38] 35	[0.69] 17,5	[1.08] 27,4	[0.54] 13,7	[0.20] 5,1	1 1/8-16	[0.50] 12,7
821553	8215, 8216	[2.50] 63,5	[1.25] 31,8	[2.12] 53,8	[1.06] 26,9	[0.28] 7,1	2 1/4-12	
841550	8415, 8416	[2.00] 50,8	[1.00] 25,4	[1.60] 40,6	[0.80] 20,3		1 3/4-12	

Dimensions and technical information are subject to change without notice

Features:

- Available with threaded body, or lower flange mounting
- Low profile for confined spaces
- Double locked arm attachment is bolted to piston rod and clamped around shaft diameter

Applications:

- Assembly
- Welding
- Light machining

Also Available:

See page MC-PSC-35 for clamping arms

See page MC-PSC-36 for jam nuts

Series 035-1

Threaded body design for mounting through fixture plates.

Series 035-2

Flanged body design for quick and easy mounting

Technical Information

Model	Swing Direction	Total Stroke [in]mm **S**	Stroke During Rotation [in]mm **S1**	Vertical Clamp Stroke [in]mm **S2**	Clamping Force [lbf.] N†	Bore Size [in]mm	Air Consumption‡ [ft³]dm³	Weight [lb.]kg	Replacement Seal Kit
035-125-190	RH	[1.04] 26,3	[0.51] 12,8	[0.53] 13,5	[20] 89	[0.98] 25	[0.005] 0,13	[0.56] 0,25	905516
035-125-290	LH								
035-132-190	RH	[1.13] 28,8	[0.56] 14,3	[0.57] 14,5	[30] 133	[1.26] 32	[0.008] 0,24	[0.94] 0,43	905517
035-132-290	LH								
035-140-190	RH	[1.20] 30,4	[0.57] 14,4	[0.63] 16	[60] 267	[1.57] 40	[0.015] 0,41	[1.31] 0,59	905518
035-140-290	LH								
035-150-190	RH	[1.18] 30	[0.63] 16	[0.55] 14	[69] 307	[1.97] 50	[0.023] 0,64	[1.81] 0,82	905519
035-150-290	LH								
035-225-190	RH	[1.05] 26,7	[0.54] 13,7	[0.51] 13	[20] 89	[0.98] 25	[0.005] 0,13	[0.56] 0,25	905516
035-225-290	LH								
035-232-190	RH	[1.06] 26,8	[0.57] 14,4	[0.49] 12,4	[30] 133	[1.26] 32	[0.008] 0,24	[1.13] 0,51	905517
035-232-290	LH								
035-240-190	RH	[1.09] 27,7	[0.57] 14,4	[0.52] 13,3	[60] 267	[1.57] 40	[0.015] 0,41	[1.40] 0,64	905518
035-240-290	LH								
035-250-190	RH	[1.13] 28,8	[0.63] 16	[0.51] 12,8	[69] 307	[1.97] 50	[0.023] 0,64	[1.90] 0,86	905519
035-250-290	LH								

† with standard clamping arm at 5bar [72psi]. ‡ per double stroke at 5bar [72psi]

Operating Pressure Range: 3bar [45psig] to 7bar [100psig]
Maximum Operating Temperature: 80°C [176°F]

035 SERIES

Pneumatic Swing Clamps | Dimensions

Series 035-1

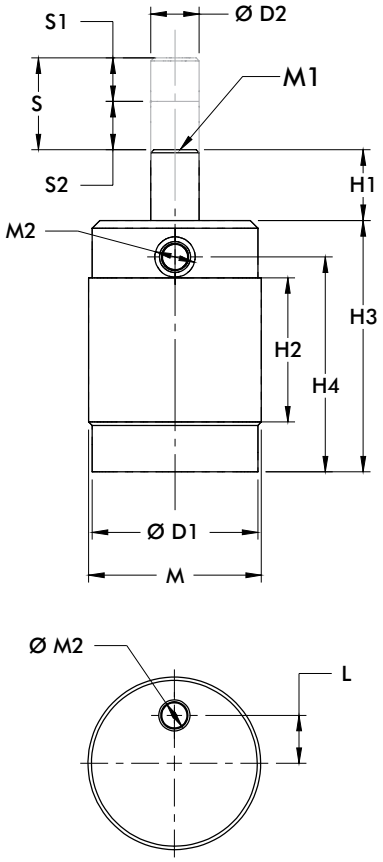

Series 035-2

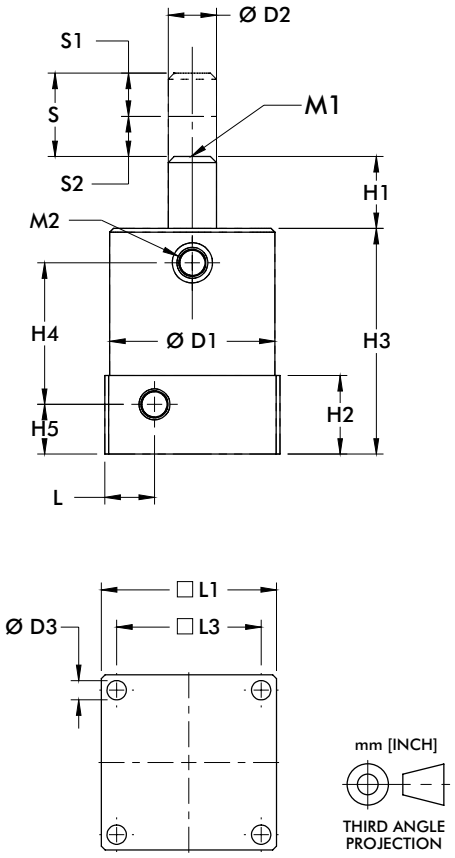

Mounting Options

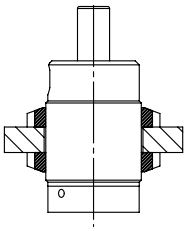

035-1
Threaded body mounts through a clearance hole and locked in place using two optional jam nuts

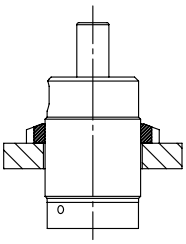

035-1
Threaded body mounts into a threaded hole and is locked in place using one optional jam nuts

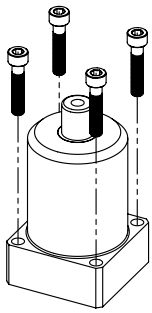

035-2
Mount using four mounting holes in the base flange

Model	ØD1	ØD2	D3	H1	H2	H3	H4	H5	L	L1	L3	M	M1	M2
035-125-( )	[1.42] 36	[.55] 14	--	[0.57] 14,4	[1.50] 38,1	[2.76] 70	[2.25] 57,2	--	[0.35] 9	--	--	1-½ -16	1/4-20	#10-32
035-132-( )	[1.79] 45,4	[0.63] 16	--	[0.75] 19,1	[1.72] 43,7	[3.87] 98,2	[2.63] 66,7	--	[0.45] 11,4	--	--	1-7/8-16	5/16-18	1/8 NPT
035-140-( )	[2.16] 54,8		--	[0.76] 19,4	[1.88] 47,7	[3.28] 83,2	[2.80] 71	--	[0.70] 17,8	--	--	2-1/4-16		
035-150-( )	[2.36] 60	[0.79] 20	--	[0.70] 17,8	[2.00] 50,8	[3.48] 88,3	[2.95] 75	--	[0.50] 12,7	--	--	2-1/2-16	3/8-16	
035-225-( )	[1.38] 35	[.55] 14	[.18] 4,5	[0.60] 15,2	[.91] 23	[2.62] 66,5	[1.60] 40,6	[0.50] 12,7	[0.57] 14,5	[1.57] 40	[1.22] 31	--	1/4-20	#10-32
035-232-( )	[1.97] 50	[0.63] 16	[.26] 6,5	[0.85] 21,6		[2.79] 71	[1.76] 44,6	[0.57] 114,5	[0.65] 16,5	[2.13] 54	[1.73] 44	--	5/16-18	1/8 NPT
035-240-( )	[2.16] 54,8			[0.94] 23,9	[1.03] 26,1	[2.95] 75	[1.85] 47	[0.65] 16,5	[0.65] 16,5	[2.29] 58,2	[1.89] 48	--		
035-250-( )	[2.36] 60	[0.79] 20	[.33] 8,5	[0.78] 19,7	[1.03] 26	[3.15] 80	[2.05] 52			[2.68] 68	[2.17] 55	--	3/8-16	

Dimensions and technical information are subject to change without notice

Series 035 Clamping Force
(w/ standard clamping arm)

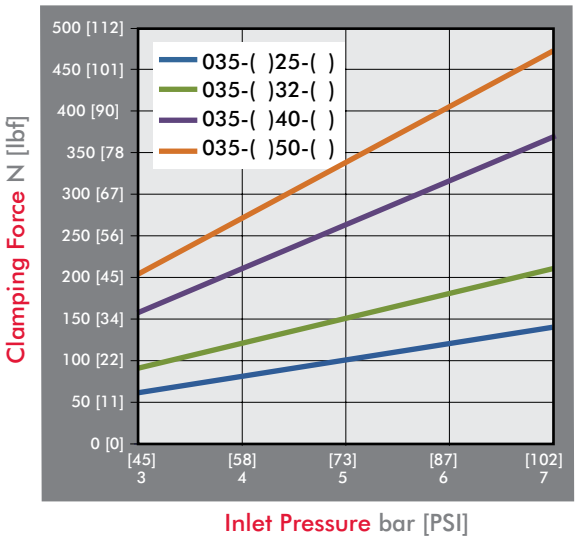

Guidelines

DESTACO Pneumatic Swing Clamps are designed for long life when using standard clamping arms and spindles. In the event that a longer arm or additional weight is needed, please consult these charts for the allowable weight and length.

Example: 035-132-190
At a weight of 80 gr, the maximum length of the arm is approximately 90mm.

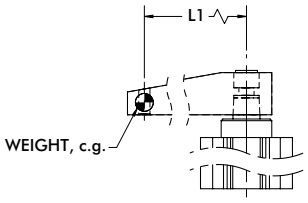

All data refers to an operating pressure of 5 bar [72psi] and an opening and closing time of 1 second.

25mm, 32mm Clamp Arm Weight

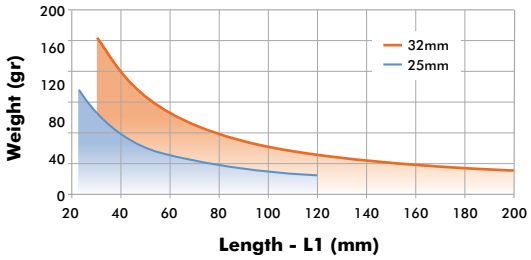

40mm, 50mm Clamp Arm Weight

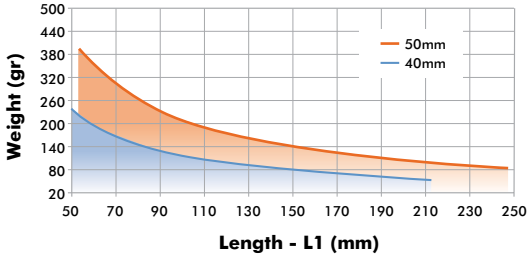

035 SERIES

Pneumatic Swing Clamps | Clamping Arms

Features:

- For standard use
- Aluminum construction
- Clamp on style connection for 360 deg. arm positioning

036-XXX-02

036-XXX-01

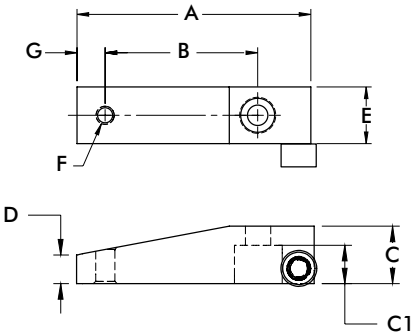

Part Number	Used with Model/series	A	B	C	C1	D	E	F	G	Weight [lbs] kg
036-551-01	035-12.... 035-22....	[2.38] 60,5	[1.36] 34,5	[0.63] 15,9	[0.40] 10,2	[0.31] 8	[0.75] 19,1	1/4-20	[0.32] 8	[0.10] 0,05
036-551-02		[3.38] 85,9	[2.36] 60							[0.13] 0,06
036-630-01	035-13.... 035-23.... 035-14.... 035-24....	[3.10] 78,7	[2.00] 50,8	[0.75] 19,1	[0.50] 12,7	[0.38] 9,5	[0.75] 19,1	5/16-18	[0.38] 9,5	[0.15] 0,07
036-630-02		[4.73] 120	[3.63] 92,1							[0.21] 0,10
036-787-01	035-15.... 035-25....	[4.00] 101,6	[2.75] 69,9	[1.00] 25,4	[0.70] 17,8	[0.50] 12,7	[1.00] 25,4	3/8-16	[0.38] 9,5	[0.33] 0,15
036-787-02		[6.36] 161,5	[5.00] 127							[0.49] 0,22

Dimensions and technical information are subject to change without notice

Features:

- For use with Threaded Body Pneumatic Swing Clamps
- Variable height adjustment
- For recessed mounting
- Steel construction

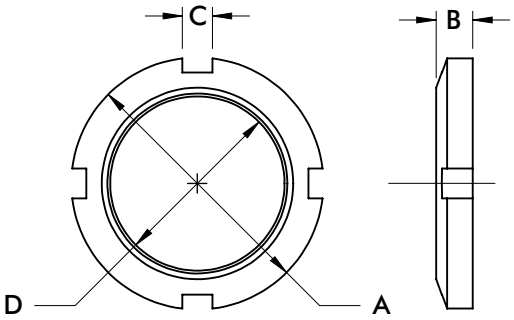

Part Number	Used with Model/ series	A	B	C	D	Weight [lbs] kg
051-150-160	035-125-190, 035-125-290	[2.00] 50.8	[0.38] 9.7	[0.275] 7.0	1 1/2-16 UN	[0.13] 0.06
051-187-160	035-132-190, 035-132-290	[2.63] 66.7		[0.312] 7.9		[0.25] 0.11
051-225-160	035-140-190, 035-140-290	[3.00] 76.2	[0.50] 12.7		2 1/4-16 UN	[0.40] 0.18
051-250-160	035-150-190, 035-150-290	[3.25] 82.6				[0.44] 0.20

8700 SERIES

Pneumatic Lever Clamps | Product Overview

Features:
- Alternative solution to swing clamps when space is limited
- The clamping lever may be positioned left, forward, or right (relative to ports) within the same clamp body
- Threaded body with upper flange mount
- Non-toggle locking linkage
- Clamping arm and spindle included

Applications:
- Assembly & welding fixtures
- Light machining

Also Available:
See page MC-PSC-39 for jam nuts

8725

8732
8732G

8740
8740G

8750
8750G

Technical Information

Model	Vertical Clamping Stroke* [in.] mm	Clamping Force† [lbf.] N	Bore Size [in.] mm	Air Consumption‡ [in.³] cm³	Weight [lb.] kg	Seal Kit
8725	[0.10] 2,5	[43] 195	[0.98] 25	[0.004] 0,11	[1.3] 0,6	872500
8732	[0.12] 3,2	[64] 285	[1.26] 32	[0.008] 0,23	[2.2] 1	873200
8732G						
8740		[106] 470	[1.57] 40	[0.014] 0,41	[2.6] 1,2	874000
8740G						
8750	[0.15] 3,8	[167] 745	[1.97] 50	[0.023] 0,64	[4,4] 2	875000
8750G						

* Equal to approx. 6° above horizontal with standard clamping arm. † at 5bar [72psi].
‡ per double stroke at 5bar [72psi].

Operating Pressure Range:
3bar [45psig] to 7bar [100psig]
Max. Operating Temperature:
-10°C to 80°C [14°F to 175°F]

Application Note:
If using clamping arms other than standard, the length must not exceed 1.5X the overall length of the standard arm.

The inlet air flow rate should be adjusted to position the arm in no less than 1/2 second for standard arms and no less than 1 second in the case of an extended arm.

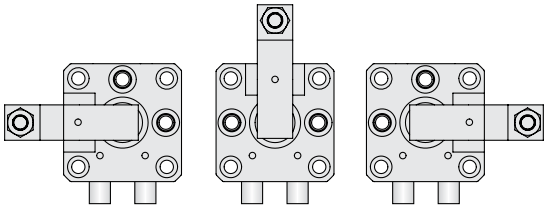

Levers can be positioned in one of three positions in relation to the air ports.

Dimensions and technical information are subject to change without notice

Pneumatic Lever Clamps | Dimensions, Clamping Forces

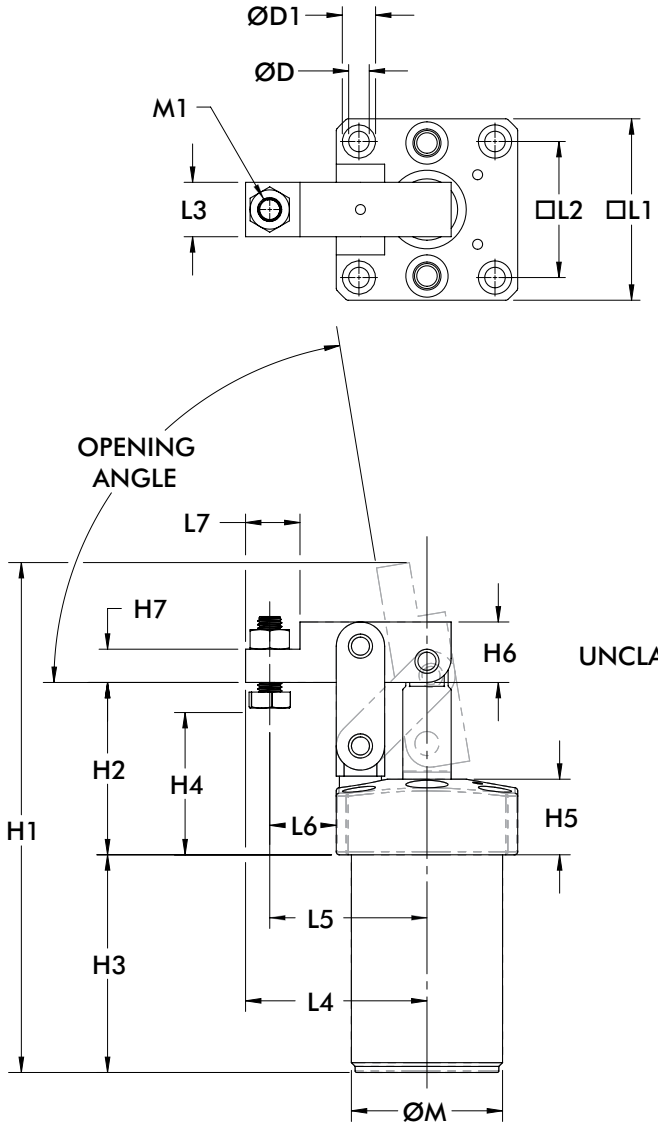

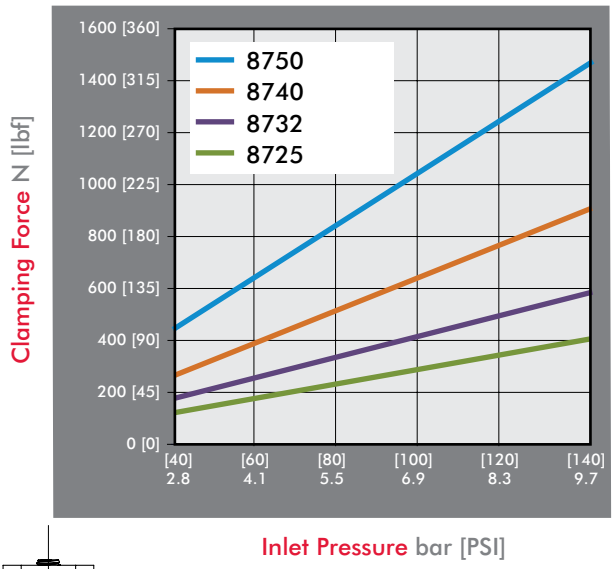

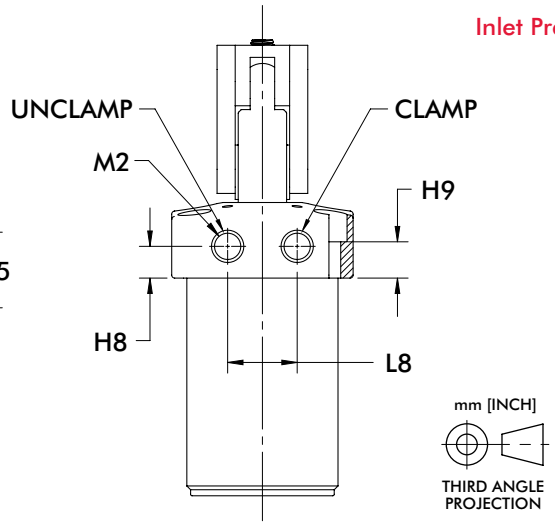

Model	Opening Angle	ØD	ØD1	H1	H2	H3	H4 (min/max)	H5	H6	H7	H8	H9
8725	80°	[0.22] 5,5	[0.35] 9	[5.67] 144	[1.97] 50	[2.42] 61,5	[0.59-0.98] 15-25	[0.98] 25	[0.67] 17	[0.39] 10	[0.47] 12	[0.59] 15
8732/ 8732G	81°	[0.27] 6,8	[0.43] 11	[6.65] 169	[2.25] 57	[2.83] 72	[0.63-1.18] 16-30		[0.79] 20	[0.43] 11	[0.41] 10,5	[0.51] 13
8740/ 8740G	82°			[6.93] 176	[2.40] 61	[2.85] 72.5	[0.75-1.14] 19-29		[0.98] 25	[0.55] 14		
8750/ 8750G	75°	[0.33] 8,5	[0.55] 14	[7.87] 200	[2.60] 66	[3.11] 79	[0.86-1.30] 22-33		[1.18] 30	[0.59] 15		[0.43] 11

Model	L1	L2	L3	L4	L5	L6	L7	L8	ØM	M1	M2
8725	[1.97] 50	[1.46] 37	[0.63] 16	[1.89] 48	[1.61] 41	[0.63] 16	[0.55] 14	[0.91] 23	M40 x 1.50	M6 x 1.0	M5 x 0.8
8732 8732G	[2.36] 60	[1.77] 45	[0.71] 18	[2.36] 60	[2.05] 52	[0.87] 22	[0.71] 18		M50 x 1.50	M8 x 1.25	[1/8NPT] G-1/8
8740 8740G	[2.65] 65	[1.97] 50	[0.79] 20	[2.60] 66	[2.20] 56	[0.93] 23,5	[0.79] 20	[1.02] 26	M55 x 1.50		[1/8NPT] G-1/8
8750 8750G	[2.95] 75	[2.28] 57	[0.87] 22	[3.05] 77,5	[2.50] 63,5	[1.02] 26	[1.10] 28	[1.26] 32	M65 x 1.50	M12 x 1.75	[1/8NPT] G-1/8

8700 SERIES

Pneumatic Lever Clamps | Jam Nuts

Features:

- For use with 8700 Series Pneumatic Lever Clamps
- Variable height adjustment
- For recessed mounting

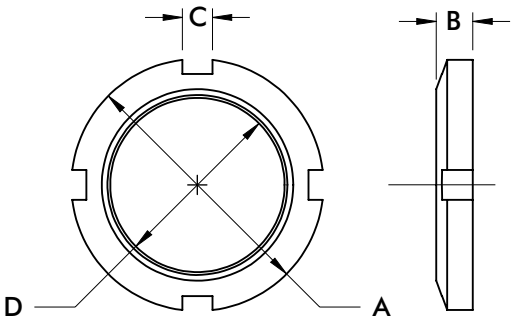

Mounting from above using 4 socket cap screws through the flange.

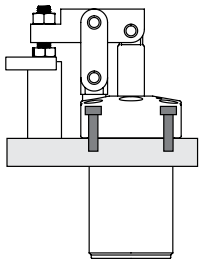

Mounting by screwingbody into a tapped hole and locking with one jam nut.

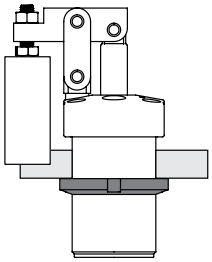

Mounting by inserting body into a plain hole and locking with two jam nuts.

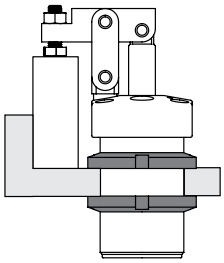

Part Number	Used with Model	A	B	C	D	Weight [lbs] kg
872550	8725	[2.28] 58	[0.35] 9	[0.28] 7	M40 x 1.50	[0.13] 0.06
873250	8732	[2.76] 70	[0.43] 11		M50 x 1.50	[0.35] 0.16
874050	8740	[2.95] 75		[0.31] 8	M55 x 1.50	[0.37] 0.17
875050	8750	[3.35] 85	[0.47] 12		M65 x 1.50	[0.33] 0.15

Dimensions and technical information are subject to change without notice

PNEUMATIC SWING CLAMPS ACCESSORIES

Features:

- Sensors are activated by a magnetic ring installed on the cylinder piston
- All sensors feature an LED for easy set-up
- IP67 rated
- Temperature Range: -10°C to 60°C [14°F to 140°F]

810169,
810173,
810174

8EA-109-1,
8EA-120-1,
810170,
810171

810151,
810153,
810155,
810157

Tie rod clip 810151-1 included.

810156,
810158

810153

Technical Information

Item Number	Mount Style	Connector	Length	Function	Voltage	Max. Switching Current	Voltage Drop
810169	Round	M8 male quick connect	165mm [6.5in.]	Reed	5-120V AC/DC	50mA	3.0V
810173				PNP	4.5-28V DC	100mA	0.5V
810174				NPN	4.5-28V DC	100mA	0.5V
8EA-109-1	T-slot	M8 male quick connect	300mm [11.8in.]	Reed	10-30V DC	100mA	3.0V
8EA-120-1		M12 male quick connect	300mm [11.8in.]	Reed	15-30 V AC/DC	500mA	1.5V
810170		M8 male quick connect	165mm [6.5in.]	PNP	10-30V DC	100mA	2.0V
810171				NPN	10-30V DC	100mA	2.0V
810151	Tie Rod	No connector cord	2.7m [9ft.]	Reed	5-120V AC/DC	500mA	3.5V
810153				Reed	24-240V AC	4A	1.0V
810155				PNP	6-24V DC	500mA	1.0V
810157				NPN	6-24V DC	500mA	1.0V
810156	Band Clamp			Reed	5-120V AC/DC	500mA	3.5V
810158				PNP	6-24V DC	500mA	1.0V

PNEUMATIC SWING CLAMPS ACCESSORIES

Pneumatic Swing Clamps | Extension Cordsets

Features:

- For use with M8 quick connect sensors
- Threaded coupling nuts provide IP67 protection
- Robotic grade, oil and abrasion resistant polyurethane (PUR) cable

Item Number	Length	Rating	Temperature Rating
CABL-010	2 Meter [78in.]	120V AC/DC, 3A max.	-20°C to 80°C [-40°F to 176°F]
CABL-013	5 Meter [16.4ft.]		

Wiring Schematics

810169

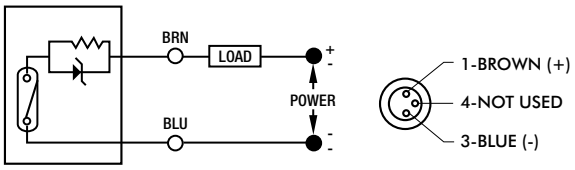

810170, 810173

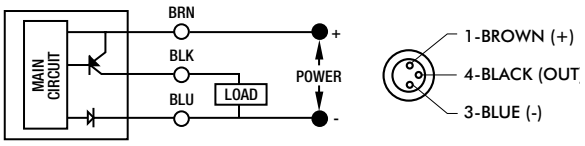

810171, 810174

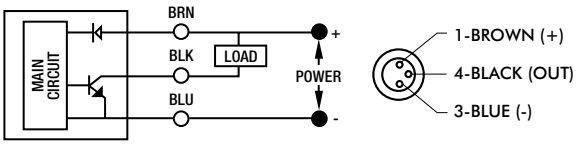

8EA-109-1, 8EA-120-1

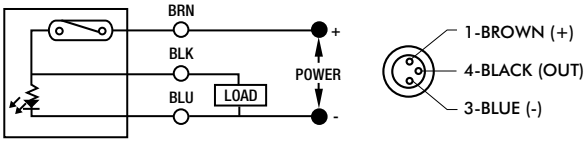

810153

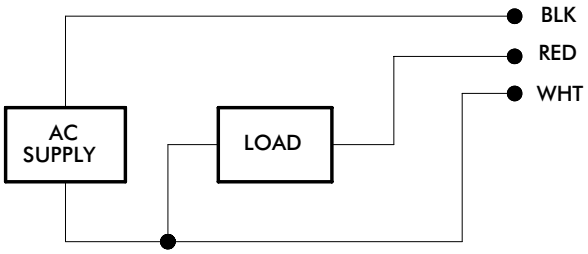

810151, 810156

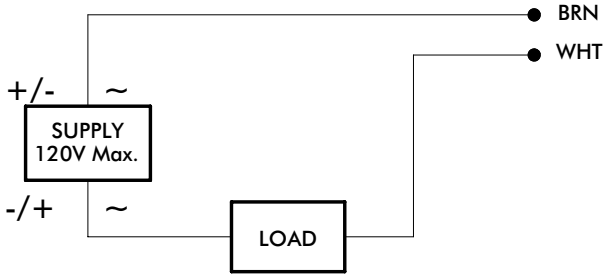

810155, 810158

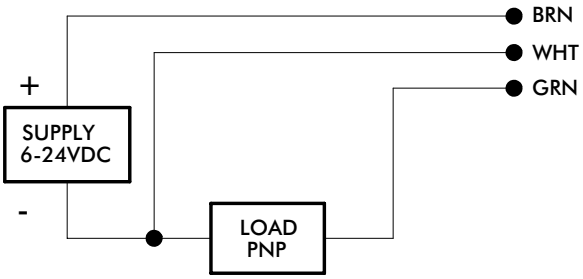

810157, 810158

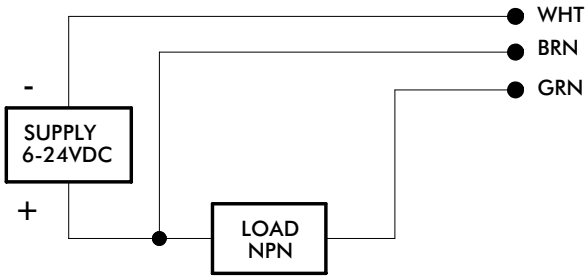

Dimensions and technical information are subject to change without notice

6004-SW SERIES

Manual Swing Clamps | Product Overview and Dimensions

Features:
- Left or right swing motion available
- 90° Swing clamp arm motion
- Higher clamping force than pneumatic version
- Though-hole mounting
- Clamp arm can be radially positioned 360°
- Handle can be radially positioned up to 180°

Applications:
- Assembly
- Checking fixtures
- Welding fixtures
- Tensioning devices

6004-**SWL**
Clamp Arm
Swing Left

6004-**SWR**
Clamp Arm
Swing Right

Technical Information | Holding Capacities | Dimensions

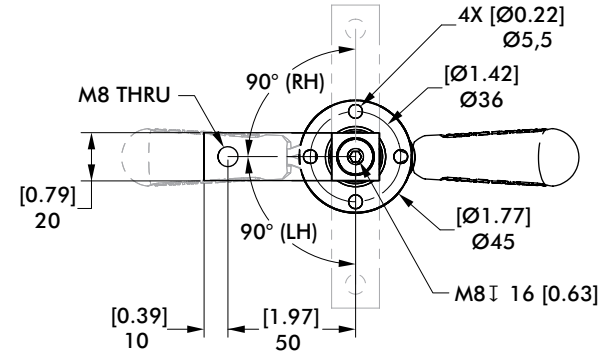

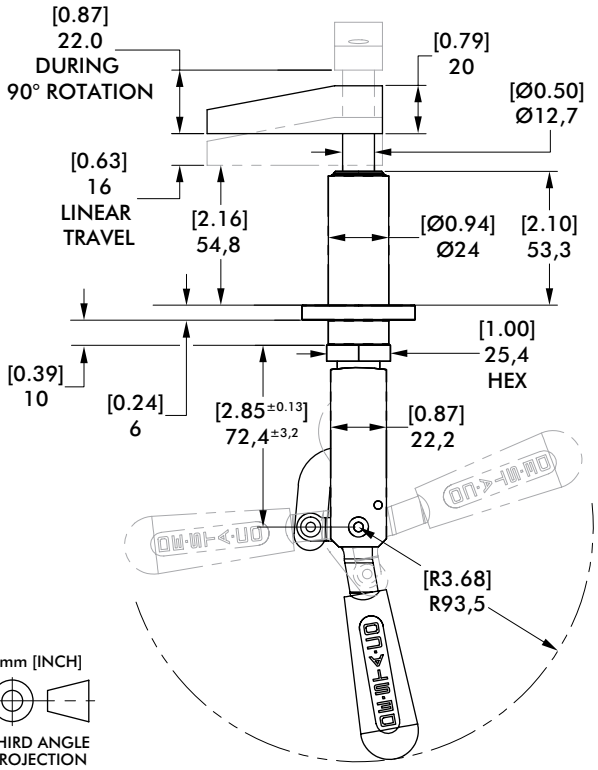

mm [INCH]

THIRD ANGLE PROJECTION

Model	Swing Direction	Total Stroke [in] mm	Stroke During Rotation [in] mm	Stroke Straight Pull [in] mm	Weight [lb] Kg
6004-SWL	LH	[1.50] 38	[0.87] 22	[0.63] 16	[1.32] 0,6
6004-SWR	RH				

Applied Force (on handle) [lbs] N	[40] 178	[30] 133	[20] 89	[10] 44
Plunger Pull Force (straight pull)	[576] 2562	[432] 1922	[288] 1281	[144] 641
Clamp Force (with arm shown below)	[323] 1437	[269] 1197	[189] 841	[108] 480

6004-**SWL**

6004-**SWR**

Dimensions and technical information are subject to change without notice

DESTACO a DOVER company

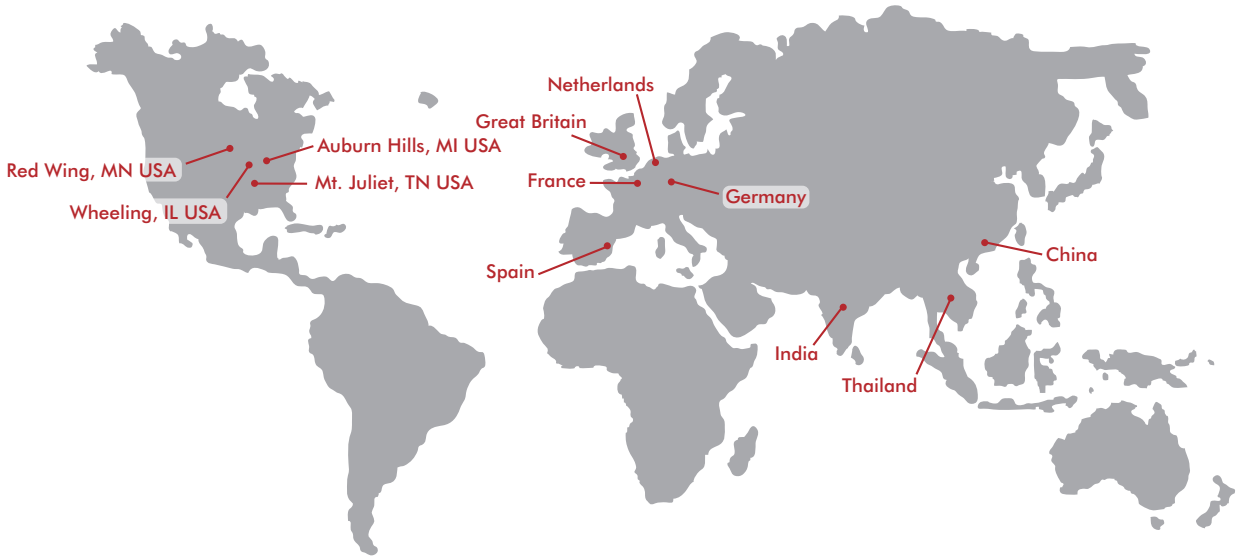

GLOBAL LOCATIONS

NORTH AMERICA

Corporate Headquarters
Auburn Hills, Michigan
Toll Free: 1.888.DESTACO
Marketing: marketing@destaco.com

Global Technology Center
Auburn Hills, Michigan
Tel: 1.248.836.6700
Customer Service: customerservice@destaco.com

Mt. Juliet, Tennessee
Tel: 1.888.DESTACO
Customer Service: customerservice@destaco.com

Wheeling, Illinois
Tel: 1.800.645.5207
Customer Service: camco@destaco.com

Red Wing, Minnesota (Central Research Laboratories)
Tel: 651.385.2142
Customer Service: sales@centres.com

ASIA

Thailand
Tel: +66-2-326-0812
Customer Service: info@destaco.com

China
Tel: +86-21-6081-2888
Customer Service: china@destaco.com

India
Tel: +91-80-41123421-426
Customer Service: india@destaco.com

EUROPE

Germany
Tel: +49-6171-705-0
Customer Service: europe@destaco.com

France
Tel: +33-4-73545001
Customer Service: france@destaco.com

Great Britain
Tel: +44-1902-797980
Customer Service: uk@destaco.com

Spain
Tel: +34-936361680
Customer Service: spain@destaco.com

Netherlands
Tel: +31-297285332
Customer Service: benelux@destaco.com

© Copyright, 2020 DESTACO. All rights for layout, photos and text rest with the publisher DESTACO. All photomechanical or other reproductions only with our express permission. All sales are based on our terms and conditions of sale, delivery and payment.