CESEHSA soluciones

WE LOVE TECHNOLOGY

FIBRO

# FIBRO ELECTRONIC TAPPING UNIT FETU

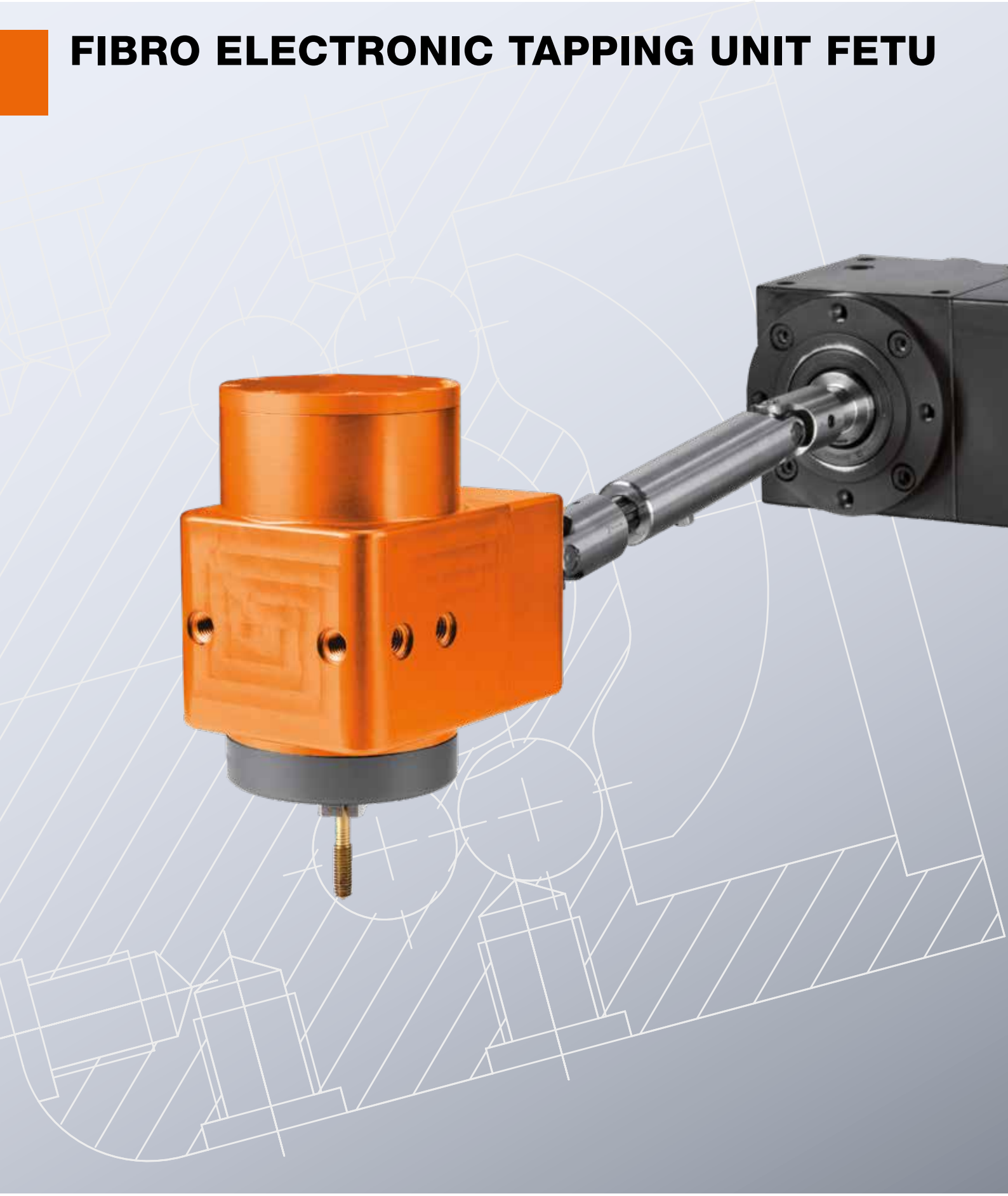

cesehsa.com.mx

tel: 018002373472

LÄPPLE

# FIBRO ELECTRONIC TAPPING UNIT FETU

THE ELECTRONIC THREAD TAPPING UNIT, SPECIALLY DESIGNED FOR PUNCHING AND FORMING PROCESSES, STANDS OUT THANKS TO ITS EXCELLENT PROCESS INTEGRATION. REGARDLESS OF WHETHER THE ELECTRONIC THREAD TAPPING UNIT IS USED IN PROGRESSIVE DIES OR PROGRESSION TOOLS, IN PRESSES OR IN AUTOMATIC PUNCHING AND BENDING MACHINES, THE DESIRED THREADS ARE CREATED IN A RELIABLE AND CONTROLLED FASHION. THIS IMPROVES THREAD QUALITY, INCREASES RELIABILITY AND ENSURES QUICK, COST-EFFECTIVE PRODUCTION.

## QUALITY

The thread tapping unit produces high quality threads in sizes M0.8-M24. The threads stand out thanks to:

- great strength and stability
- high surface quality

Using the auto-teach function, the system automatically determines and monitors 100% of the optimum parameters for the respective process. In the event of tool breakage, tool wear or core hole deviations, these highly dynamic processes are stopped in fractions of a second and the forming tool automatically moves from the danger zone to a safe position. All data records can be selected and summarized as QS protocol.

## COST EFFECTIVENESS

In addition to producing high Quality threads, the thread creation is above all extremely cost effective. Cost savings can be achieved through:

- long service life of the tools
- faster processing times
- avoiding rejects
- eliminating the feeding of parts and additional production stages
- reusability of the drive- and control-components for multiple thread sizes.

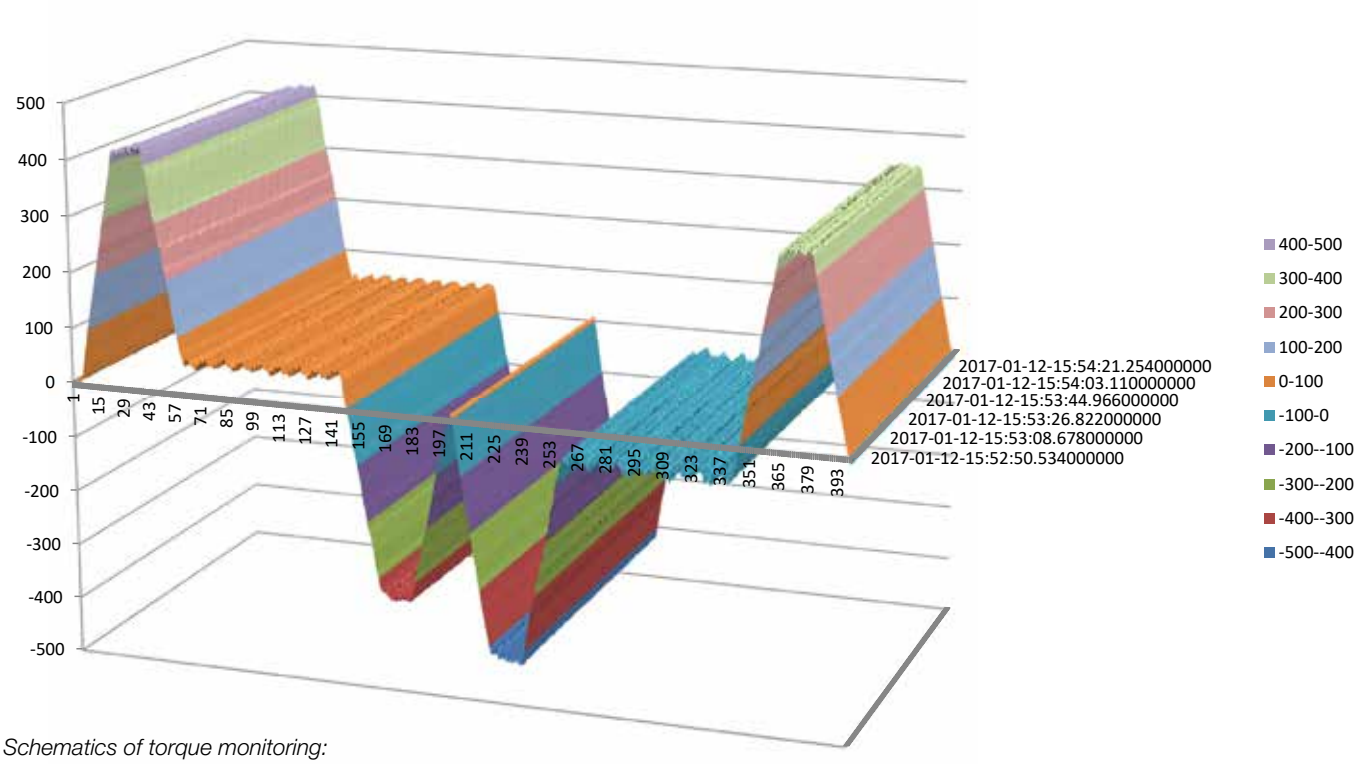


*Schematics of torque monitoring:*
*During thread forming, a measurement takes place every 2 ms, and the value is compared with the case graph.*
*For each thread a separate data record is created, which can be monitored if necessary.*

## SHORT PROCESS TIMES FOR THE HIGHEST PRODUCTIVITY

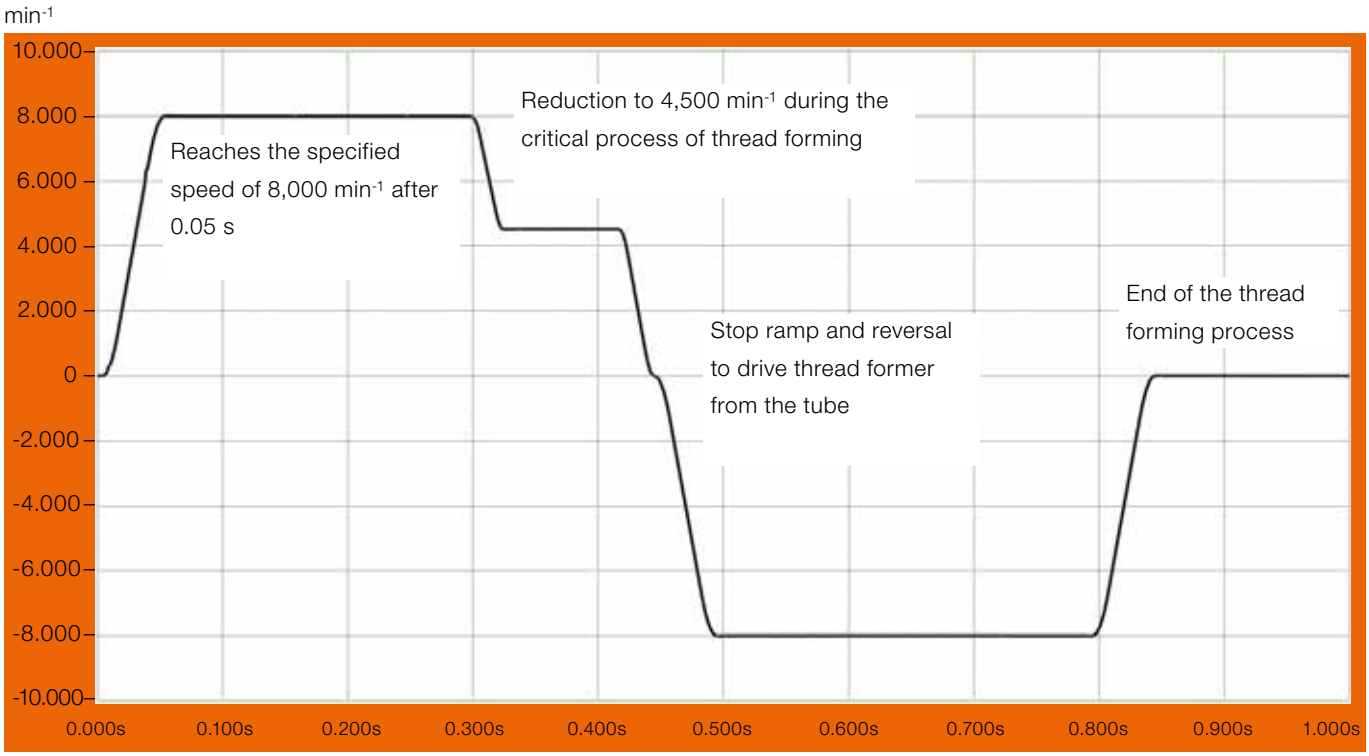


*Process schematics of a practical application with a speed of 8,000 min$^{-1}$ on the forming tool, a M8 thread with a thread depth of 35 mm*

Highly dynamic drives ensure very quick acceleration ramp ups. Thus, very short process times at constant forming speeds on the threading tool are possible without affecting the life of the tool.

## NUMBER OF STROKES OF SOME CASE HISTORIES

| Thread size | M8 | M6 | M4 | M0,8 |
|---|---|---|---|---|
| Thread length / Material | | | | |
| Thread length | 15 mm | 5 mm | 2 mm | 0,5 mm |
| Material | S 420 MC | 16MnCr5 | DX51D | X5CrNi18 |
| Forming speed | | | | |
| Forming speed | 70 m/min | 50 m/min | 57 m/min | 15 m/min |
| Number of revolutions of thread tool | 2.800 min$^{-1}$ | 2.600 min$^{-1}$ | 4.500 min$^{-1}$ | 6.000 min$^{-1}$ |
| Productivity | | | | |
| Time / Thread | 0,7 s | 0,5 s | 0,2 s | 0,35 s |
| Stroke/min | 50 min$^{-1}$ | 60 min$^{-1}$ | 160 min$^{-1}$ | 110 min$^{-1}$ |
| System configuration | | | | |
| Standard head | 2x | | | 1x |
| Multiple head | | 1x3 | 1x4 | |

# FIBRO ELECTRONIC TAPPING UNIT FETU

## FLEXIBILITY

Thanks to the movable PTO shaft, the system can also be used in hard-to-reach positions and at unusual angles. The forming head of the unit is mounted directly in the respective tool. It does not matter whether a multi-head or a head with integrated internal lubrication is used, or whether a single or a double gear is to be connected, the servo motor and the associated control remain the same and can be reused for any further project.

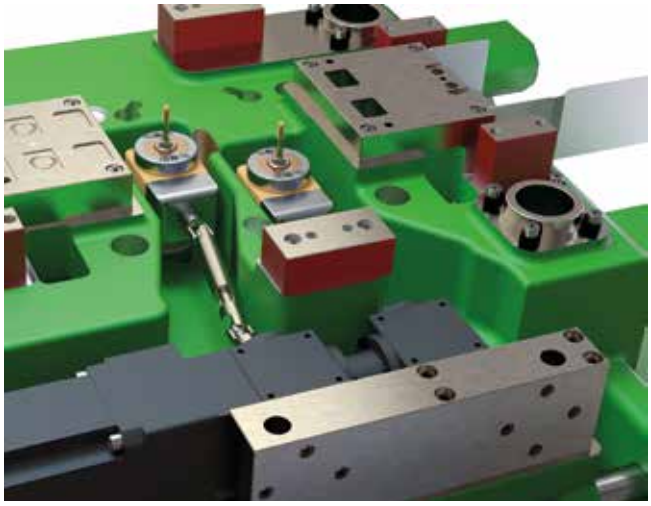

## THE CONTROL BOX

The controls and the servo regulator for the drives are located in the control box. The size of the control box varies according to the number of systems that must be controlled. The control unit can regulate up to 6 independent drives. 10 programmes per unit allow unrestricted programming of the parameters (rotation speed of the leader, limitation of the torque, number of rotations of the leader, cycle time, batch counter, torque monitoring). Data storage may also take place, which serves to record all the torque curves.

## THE DRIVE SHAFT

The drive shaft transfers the drive's torque to the tapping head. By evening out differences in height and length, the tapping head can be installed in every position within the tool. It is also manoeuvrable on holding-down plates. Using the drive shaft is optional.

## THE BEVEL GEAR

The bevel gear serves to limit the length of the installation space required by the drive. Using the bevel gear is optional.

## THE DRIVE

The drive consists of one synchronous servomotor which is capable for use in single- or multiple applications. This makes it possible to create different thread sizes in a tool using one control. Thanks to the constant cutting speed, significantly longer service lives are achieved than is the case with mechanical, forced piloted systems. The drive is independent from the press stroke and press motion.

## HIGH PERFORMANCE IN TIGHT SPACES

FIBRO has developed a miniature unit especially for the smallest thread sizes, which corresponds in design and function to the large FETU unit, but is significantly more compact. With a width of only 30 mm, the mini-forming head can be integrated into even the smallest tools.

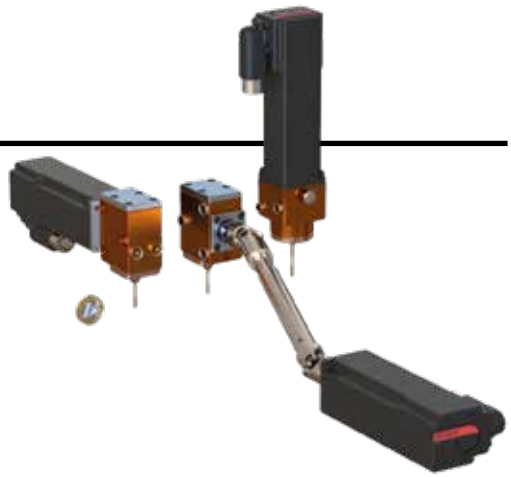

# FIBRO ELECTRONIC TAPPING UNIT FETU

INTEGRATED INTERNAL LUBRICATION UNIT

*Threading head with internal lubrication*

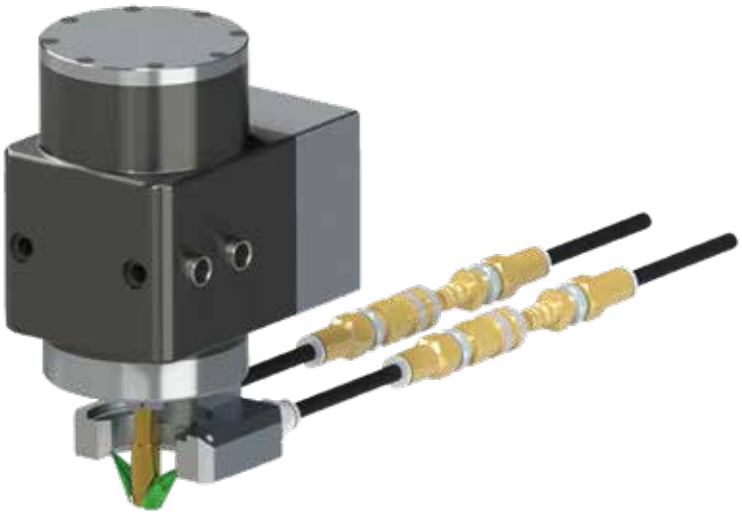

*Threading head with ring nozzle technology*

STANDARD THREADING HEADS

subject to alterations

## SPECIAL / CUSTOMIZED APPLICATIONS

*Triple threading head with one drive per spindle*

*Quadruple M4 threading head*

*Quadruple M4 threading head with two drives per head*

## PLUG-&-WORK

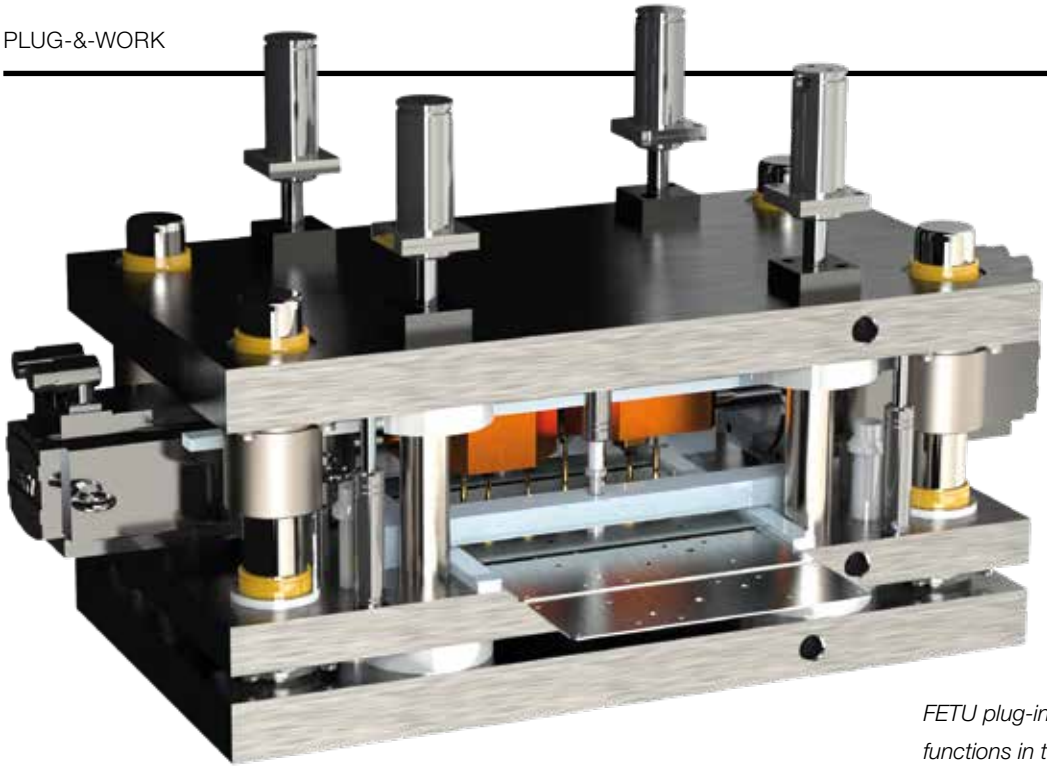

*FETU plug-in solutions combine several functions in tight areas*

## FIBRO GMBH

Geschäftsbereich Normalien
August-Läpple-Weg
74855 Hassmersheim
Germany
**T** +49 6266 73-0
info@fibro.de

## MEMBER OF THE LÄPPLE GROUP

LÄPPLE AUTOMOTIVE
FIBRO
FIBRO LÄPPLE TECHNOLOGY
LÄPPLE AUS- UND WEITERBILDUNG

## LOCATIONS

**FIBRO FRANCE SARL**
Département Eléments normalisés
26 Avenue de l'Europe
67300 Schiltigheim
France
**T** +33 3 90 20 40 40
info@fibro.fr

**FIBRO INC.**
Business Area Standard Parts
139 Harrison Avenue
Rockford, IL 61104
USA
**T** +1 815 2 29 13 00
info@fibroinc.com

**FIBRO ASIA PTE. LTD.**
Business Area Standard Parts
9 Changi South Street 3, #07-04
Singapore 486361
Singapore
**T** +65 65 43 99 63
info@fibro-asia.com

**FIBRO INDIA**
**PRECISION PRODUCTS PVT. LTD.**
Business Area Standard Parts
Plot No: A-55, Phase II, Chakan Midc,
Taluka Khed, Pune - 410 501
India
**T** +91 21 35 33 88 00
info@fibro-india.com

**FIBRO (SHANGHAI)**
**PRECISION PRODUCTS CO., LTD.**
Business Area Standard Parts
1st Floor, Building 3, No. 253, Ai Du Road
Pilot Free Trade Zone, Shanghai 200131
China
**T** +86 21 60 83 15 96
info@fibro.cn

**FIBRO KOREA CO., LTD.**
203-603, Bucheon Technopark
Ssangyong 3
397, Seokcheon-ro, Ojeong-gu,
Bucheon-si, Gyeonggi-do
Korea
**T** +82 32 624 0630
fibro_korea@fibro.kr

05/2019 Order-No. 2.5801.02.0419.0100000